EDI Guide

Invoice (INVOIC)

Electronic Data Interchange for Furniture

based on
EANCOM 2012

Version:	3.00
Variant:	EANCOM_INVOIC
Published:	14.05.2021
Author:	IWOfurn

© 2019, IWOfurn Service GmbH

Contact

Daten Competence Center e. V.
Dr.-Ing. Olaf Plümer
Geschäftsführer
Goebenstraße 4-10
32052 Herford
Tel.: +49 52 21 / 12 65 37
Fax.: +49 52 21 / 12 65 5 37

E-Mail: pluemer@dcc-moebel.org
Info: www.dcc-moebel.org

Daten Competence Center e. V.

Table of Contents

1 Structure 3
2 Diagram 7
3 Segments 26
4 Examples 128

© 2019, IWOfurn Service GmbH

Document Structure

Index	No.	Tag	St	MaxWdh	Level	Description
0000	1	UNA	C	1	0	Service string advice
0000	2	UNB	M	1	0	Interchange header
Message header						
0010	3	UNH	M	1	0	Message header
0020	4	BGM	M	1	0	Document type and document number
0030	5	DTM	M	1	1	Document date
0030	6	DTM	R	1	1	Service date
0030	7	DTM	O	35	1	Other dates
0050	8	ALI	O	5	1	Order type
0070	9	FTX	O	49	1	Free text information
0070	10	FTX	O	99	1	File attachments
0120		**SG1**	O	1	1	Reference / Commission number
0130	11	RFF	M	1	1	Commission details
0120		**SG1**	R	1	1	Reference / Order number
0130	12	RFF	M	1	1	Order number
0140	13	DTM	O	5	2	Date of the order document
0120		**SG1**	O	1	1	Reference / barcode number
0130	14	RFF	M	1	1	Barcode number
0120		**SG1**	O	1	1	Reference / Order response
0130	15	RFF	M	1	1	Order response number
0140	16	DTM	O	5	2	Date of order response
0120		**SG1**	O	1	1	Reference / Delivery note
0130	17	RFF	M	1	1	Delivery note number
0140	18	DTM	O	5	2	Creation date of the delivery note
0120		**SG1**	O	1	1	Reference / Previous invoice
0130	19	RFF	M	1	1	Previous invoice
0140	20	DTM	C	5	2	Date of the previously issued invoice.
0120		**SG1**	O	999	1	Additional reference information
0130	21	RFF	M	1	1	Additional document reference
0140	22	DTM	O	5	2	Document creation date
0220		**SG2**	R	99	1	Names and addresses of the parties involved
0230	23	NAD	M	1	1	Name and address
0270		**SG3**	O	1	2	Sales tax ID
0280	24	RFF	M	1	2	Sales tax ID
0270		**SG3**	O	1	2	Tax number
0280	25	RFF	M	1	2	Tax number
0270		**SG3**	O	1	2	Identification number at the central regulator
0280	26	RFF	M	1	2	Identification number at the central regulator
0270		**SG3**	O	1	2	Contract number
0280	27	RFF	M	1	2	Contract number
0270		**SG3**	O	1	2	Customer number

Tag = Segment-/Group-Name
Index = Segment Index Number (in Standard)
No. = Unique Segment-Number in Guide
MaxOcc = Max. Occurence in Segment/Group

St = Status
EDIFACT: M=Mandatory, C=Conditional
Usage: R=Required, O=Optional, D=Dependent, A=Advised, N=Not used

© 2019, IWOfurn Service GmbH

Document Structure

Index	No.	Tag	St	MaxWdh	Level	Description
0280	28	RFF	M	1	2	Customer number
0270		SG3	O	1	2	WEEE reg. No.
0280	29	RFF	M	1	2	WEEE reg. No.
0330		SG5	O	5	2	Contact person and communication data
0340	30	CTA	M	1	2	Contact person or department
0350	31	COM	O	5	3	Communication contact
0360		SG6	O	5	1	Sales tax
0370	32	TAX	M	1	1	Duty/tax/fee details
0400		SG7	C	99	1	Currency
0410	33	CUX	M	1	1	Currencies
0430		SG8	O	10	1	Payment term / Due date
0440	34	PAT	M	1	1	Payment term
0450	35	DTM	R	5	2	Due date
0430		SG8	O	10	1	Terms of payment / Value date
0440	36	PAT	M	1	1	Payment term
0450	37	DTM	R	1	2	Value date
0430		SG8	O	10	1	Payment term / Discount date
0440	38	PAT	M	1	1	Payment terms basis
0450	39	DTM	R	1	2	Discount date
0460	40	PCD	R	1	2	Discount percentage
0470	41	MOA	R	1	2	Monetary amount
0740		SG16	O	9999	1	Allowances and surcharges
0750	42	ALC	M	1	1	Allowance or charge
0840		SG19	C	1	2	Percentage value
0850	43	PCD	M	1	2	Percentage
0870		SG20	R	1	2	Amount of money
0880	44	MOA	M	1	2	Monetary amount
1. Invoiced unit (basic article, assortment, container, set ...)						
1090		SG26	C	9999999	1	Item position
1100	45	LIN	M	1	1	Item position
1110	46	PIA	R	1	2	GTIN
1110	47	PIA	R	2	2	Manufacturer / Series
1110	48	PIA	D	1	2	EDP number
1110	49	PIA	D	1	2	Manufacturing type
1110	50	PIA	D	1	2	Exchange group
1110	51	PIA	D	1	2	Product group
1110	52	PIA	O	4	2	Item number / Customs tariff numbers
1110	53	PIA	D	1	2	Stop / Construction type / Cisible sides
1130	54	IMD	O	1	2	Article description
1130	55	IMD	D	5	2	Type of item (flag)
1130	56	IMD	D	1	2	Invoicing unit (flag)
1130	57	IMD	O	99	2	Quality feature / certificate

Tag = Segment-/Group-Name
Index = Segment Index Number (in Standard)
No. = Unique Segment-Number in Guide
MaxOcc = Max. Occurence in Segment/Group

St = Status
EDIFACT: M=Mandatory, C=Conditional
Usage: R=Required, O=Optional, D=Dependent, A=Advised, N=Not used

© 2019, IWOfurn Service GmbH

Document Structure

Index	No.	Tag	St	MaxWdh	Level	Description
1140	58	MEA	O	5	2	Measurements
1150	59	QTY	R	5	2	Calculated quantity
1150	60	QTY	O	3	2	Other quantity data
1180	61	DTM	O	5	2	Dates
1230	62	FTX	O	99	2	Free text
1250		**SG27**	D	1	2	Position amount
1260	63	MOA	M	1	2	Position amount
1250		**SG27**	O	1	2	Item amount of surcharges and discounts
1260	64	MOA	M	1	2	Item amount of surcharges and discounts
1250		**SG27**	O	99	2	Other position amounts
1260	65	MOA	M	1	2	Monetary amount
1330		**SG29**	D	1	2	Price indication / net price
1340	66	PRI	M	1	2	Net price
1330		**SG29**	D	1	2	Price / gross price
1340	67	PRI	M	1	2	Gross price
1330		**SG29**	O	1	2	Price / Recommended Retail Sales Price
1340	68	PRI	M	1	2	Sales price
1390		**SG30**	O	10	2	Reference / Order number
1400	69	RFF	M	1	2	Order number
1410	70	DTM	O	1	3	Date of order
1390		**SG30**	O	2	2	Reference / Commission
1400	71	RFF	M	1	2	Reference
1390		**SG30**	O	10	2	Additional references
1400	72	RFF	M	1	2	Reference
1410	73	DTM	C	5	3	Date/time/period
1420		**SG31**	O	10	2	Number and type of packaging
1430	74	PAC	M	1	2	Number and type of packaging
1550		**SG34**	D	99	2	Sales tax on position
1560	75	TAX	M	1	2	Duty/tax/fee details
1720		**SG39**	O	30	2	Surcharges and discounts on position
1730	76	ALC	M	1	2	Allowance or charge
1800		**SG41**	D	1	3	Percentage
1810	77	PCD	M	1	3	Percentage details
1830		**SG42**	R	1	3	Amount of money
1840	78	MOA	M	1	3	Monetary amount
1910		**SG44**	C	5	3	TAX
1920	79	TAX	M	1	3	Duty/tax/fee details
2. Variant type of an article item						
1090		**SG26**	O	9999999	1	Variant type of an article item
1100	80	LIN	M	1	1	Variant type
1110	81	PIA	O	25	2	Additional product id

Tag = Segment-/Group-Name
Index = Segment Index Number (in Standard)
No. = Unique Segment-Number in Guide
MaxOcc = Max. Occurence in Segment/Group

St = Status
EDIFACT: M=Mandatory, C=Conditional
Usage: R=Required, O=Optional, D=Dependent, A=Advised, N=Not used

© 2019, IWOfurn Service GmbH

Document Structure

Index	No.	Tag	St	MaxWdh	Level	Description
1130	82	IMD	R	1	2	Variant type (flag)
1130	83	IMD	R	1	2	Name of the variant type
3. Variant of an article position						
1090		**SG26**	O	9999999	1	Variant of an item position
1100	84	LIN	M	1	1	Variant
1110	85	PIA	O	25	2	Additional product id
1130	86	IMD	R	99	2	Variant (flag)
1130	87	IMD	A	99	2	Variant name
4. Subitem of a set, display or container content						
1090		**SG26**	O	9999999	1	Subitem of an assortment
1100	88	LIN	M	1	1	Line item
1130	89	IMD	O	99	2	Consumer unit (flag)
Message footer summary part						
1250		**SG27**	C	1	2	Final invoice amount
1260	90	MOA	M	1	2	Final invoice amount
1250		**SG27**	A	99	2	Other invoice amounts
1260	91	MOA	M	1	2	Monetary amount
Message footer summary part per tax rate						
1550		**SG34**	D	99	2	Tax amounts
1560	92	TAX	M	1	2	Tax rate
1570	93	MOA	R	2	3	Tax amount of the tax rate
1570	94	MOA	C	2	3	Taxable amount of the tax rate
1570	95	MOA	C	2	3	Total item amount of the tax rate
1570	96	MOA	C	2	3	Total surcharges/discounts to the tax rate
2320	97	UNT	M	1	0	Message trailer
0000	98	UNZ	M	1	0	Interchange trailer

Tag = Segment-/Group-Name
Index = Segment Index Number (in Standard)
No. = Unique Segment-Number in Guide
MaxOcc = Max. Occurence in Segment/Group

St = Status
EDIFACT: M=Mandatory, C=Conditional
Usage: R=Required, O=Optional, D=Dependent, A=Advised, N=Not used

© 2019, IWOfurn Service GmbH

Message structure diagram (used Segments/Groups)

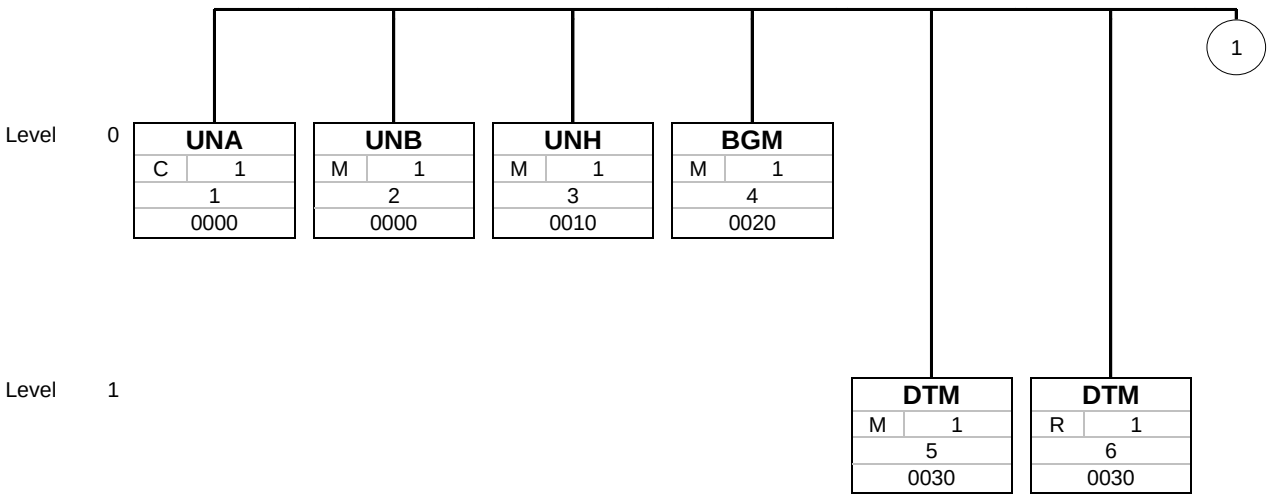

Name	
St	MaxOcc
No.	
Index	

Name = Segment-/Group-Name
St = Status (M=Mandatory, C=Conditional, R=Required, O=Optional, D=Dependent, A=Advised)
MaxOcc = Max. Occurence of Segment/Gruppe
No. = Segment-Number in Guide
Index = Segmente-Number (in Standard)

© 2019, IWOfurn Service GmbH

Message structure diagram (used Segments/Groups)

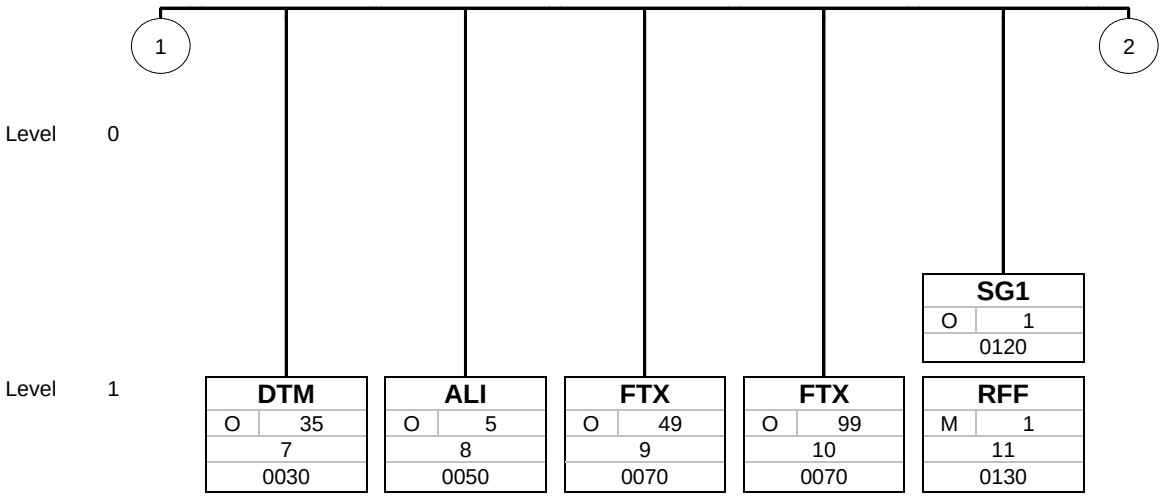

Name	
St	MaxOcc
No.	
Index	

Name = Segment-/Group-Name
St = Status (M=Mandatory, C=Conditional, R=Required, O=Optional, D=Dependent, A=Advised)
MaxOcc = Max. Occurence of Segment/Gruppe
No. = Segment-Number in Guide
Index = Segmente-Number (in Standard)

© 2019, IWOfurn Service GmbH

Message structure diagram (used Segments/Groups)

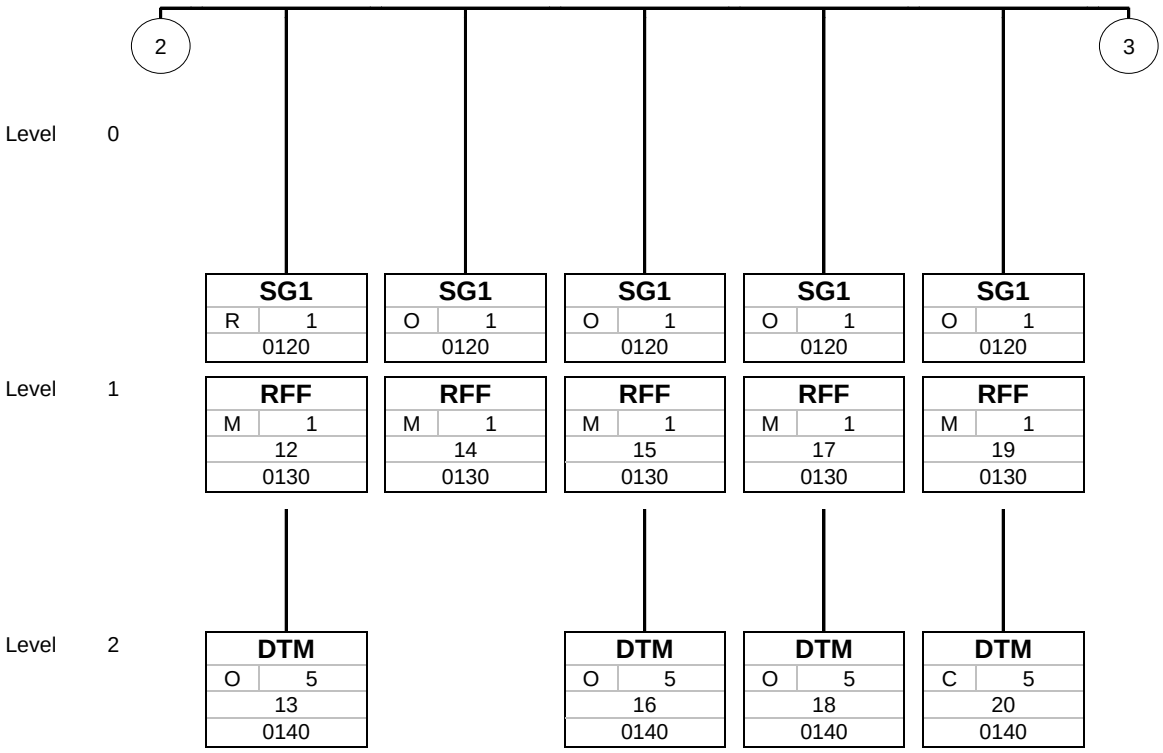

Name	
St	MaxOcc
No.	
Index	

Name = Segment-/Group-Name
St = Status (M=Mandatory, C=Conditional, R=Required, O=Optional, D=Dependent, A=Advised)
MaxOcc = Max. Occurence of Segment/Gruppe
No. = Segment-Number in Guide
Index = Segmente-Number (in Standard)

© 2019, IWOfurn Service GmbH

Message structure diagram (used Segments/Groups)

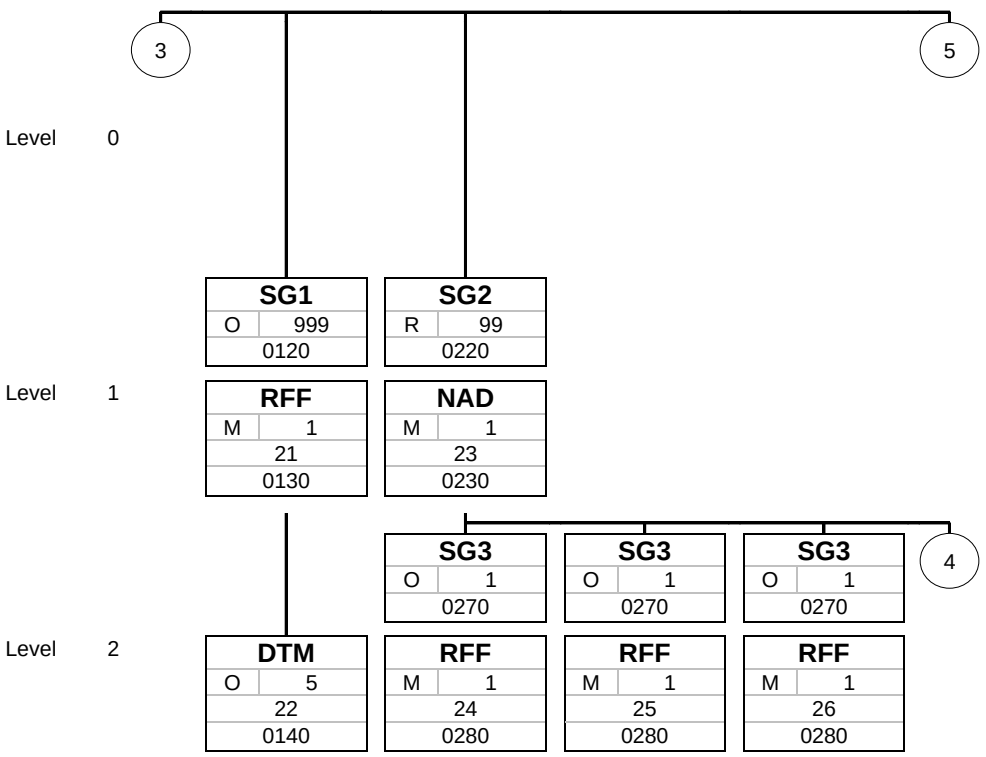

Name	
St	MaxOcc
No.	
Index	

Name = Segment-/Group-Name
St = Status (M=Mandatory, C=Conditional, R=Required, O=Optional, D=Dependent, A=Advised)
MaxOcc = Max. Occurence of Segment/Gruppe
No. = Segment-Number in Guide
Index = Segmente-Number (in Standard)

© 2019, IWOfurn Service GmbH

Message structure diagram (used Segments/Groups)

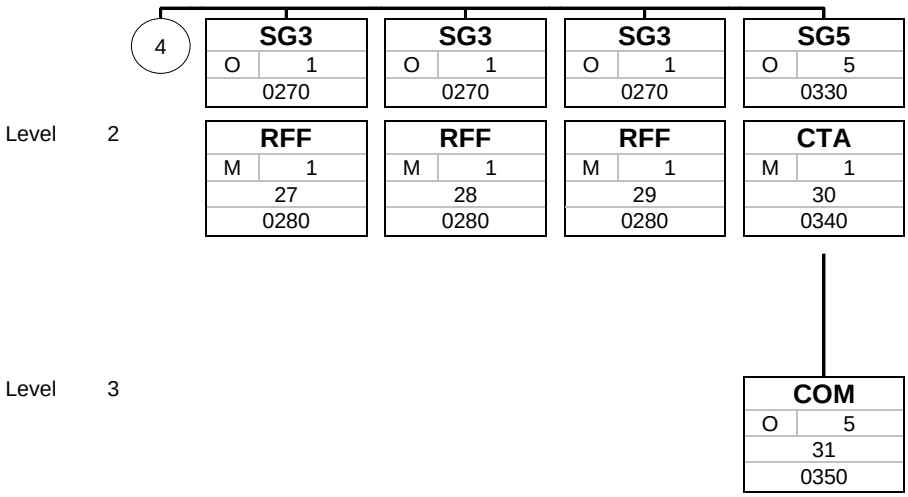

Name	
St	MaxOcc
No.	
Index	

Name = Segment-/Group-Name
St = Status (M=Mandatory, C=Conditional, R=Required, O=Optional, D=Dependent, A=Advised)
MaxOcc = Max. Occurence of Segment/Gruppe
No. = Segment-Number in Guide
Index = Segmente-Number (in Standard)

© 2019, IWOfurn Service GmbH

Message structure diagram (used Segments/Groups)

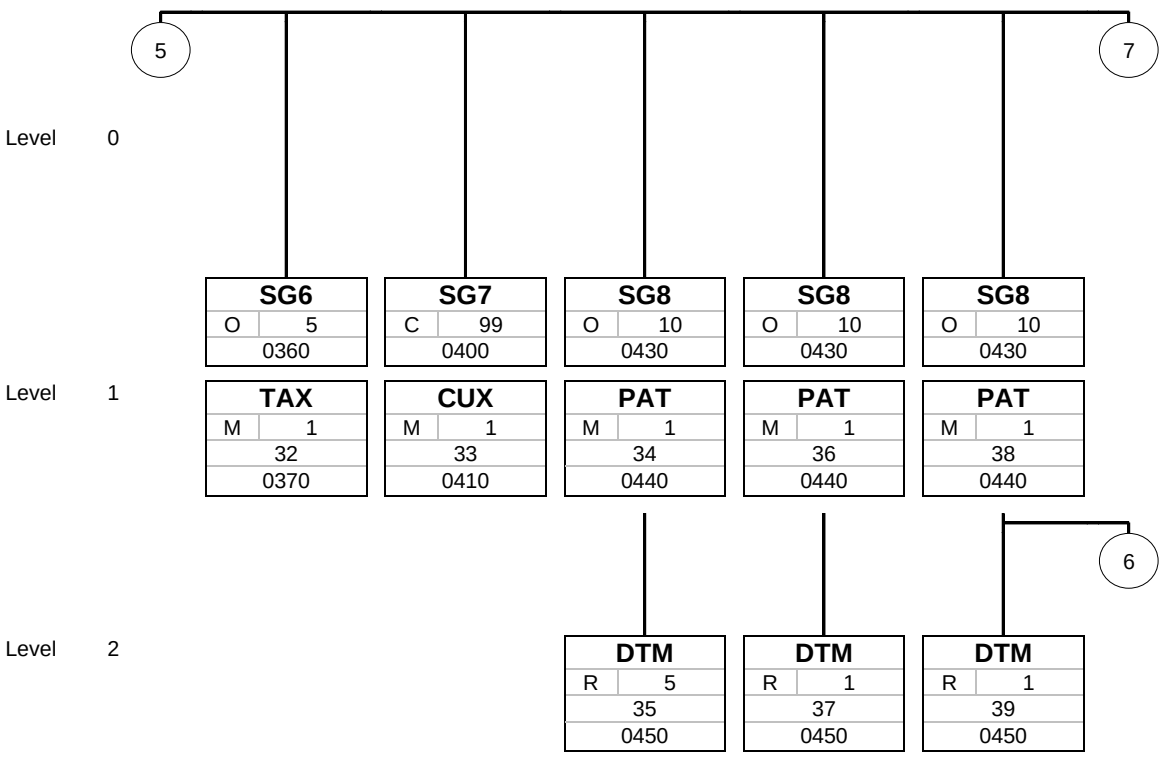

Name	
St	MaxOcc
No.	
Index	

Name = Segment-/Group-Name
St = Status (M=Mandatory, C=Conditional, R=Required, O=Optional, D=Dependent, A=Advised)
MaxOcc = Max. Occurence of Segment/Gruppe
No. = Segment-Number in Guide
Index = Segmente-Number (in Standard)

© 2019, IWOfurn Service GmbH

Message structure diagram (used Segments/Groups)

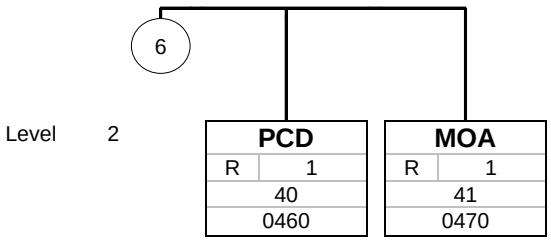

Name	Name = Segment-/Group-Name
St MaxOcc	St = Status (M=Mandatory, C=Conditional, R=Required, O=Optional, D=Dependent, A=Advised)
No.	MaxOcc = Max. Occurence of Segment/Gruppe
Index	No. = Segment-Number in Guide
	Index = Segmente-Number (in Standard)

© 2019, IWOfurn Service GmbH

Message structure diagram (used Segments/Groups)

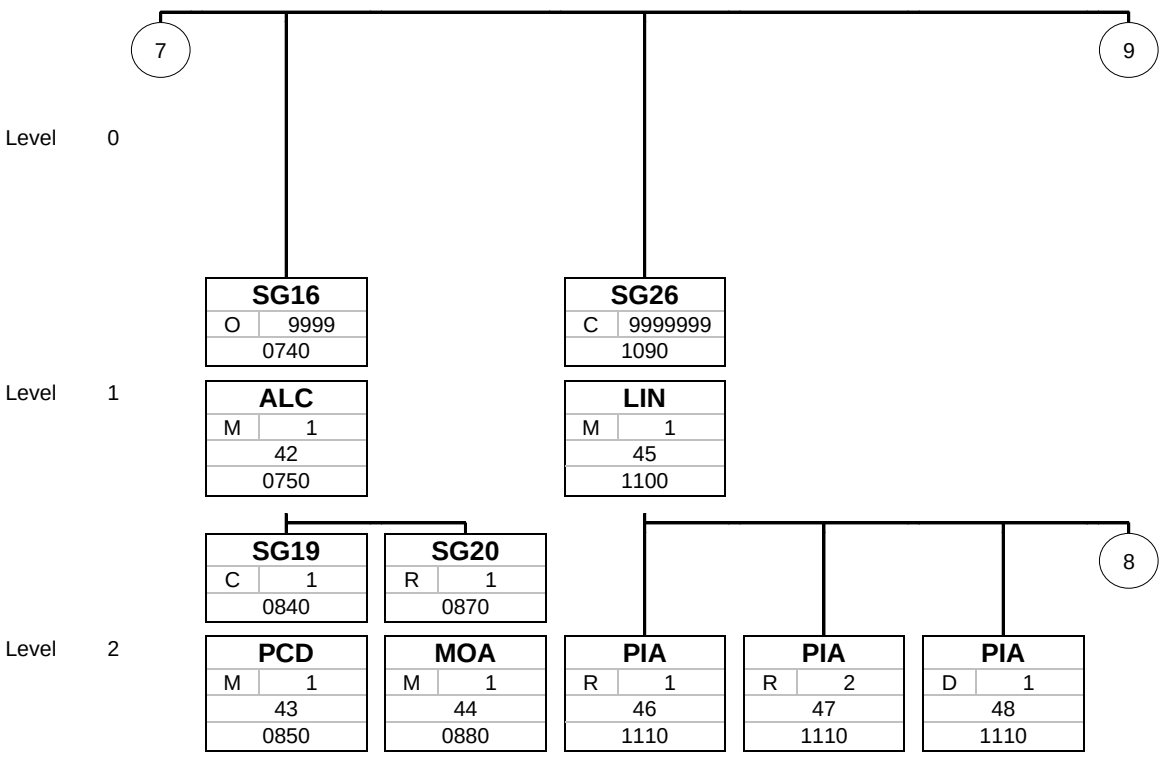

Name	
St	MaxOcc
No.	
Index	

Name = Segment-/Group-Name
St = Status (M=Mandatory, C=Conditional, R=Required, O=Optional, D=Dependent, A=Advised)
MaxOcc = Max. Occurence of Segment/Gruppe
No. = Segment-Number in Guide
Index = Segmente-Number (in Standard)

© 2019, IWOfurn Service GmbH

Message structure diagram (used Segments/Groups)

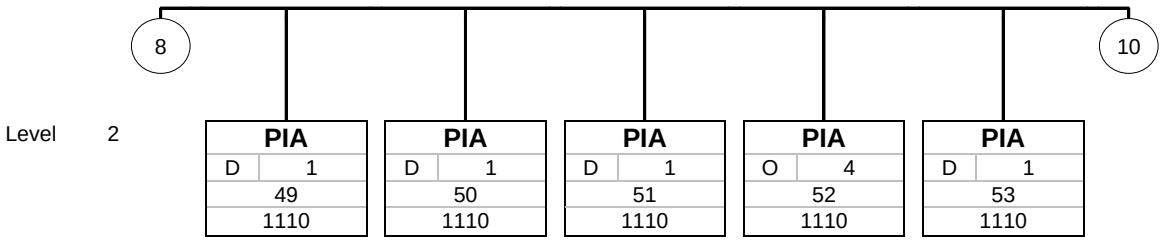

Name	
St	MaxOcc
No.	
Index	

Name = Segment-/Group-Name
St = Status (M=Mandatory, C=Conditional, R=Required, O=Optional, D=Dependent, A=Advised)
MaxOcc = Max. Occurence of Segment/Gruppe
No. = Segment-Number in Guide
Index = Segmente-Number (in Standard)

© 2019, IWOfurn Service GmbH

Message structure diagram (used Segments/Groups)

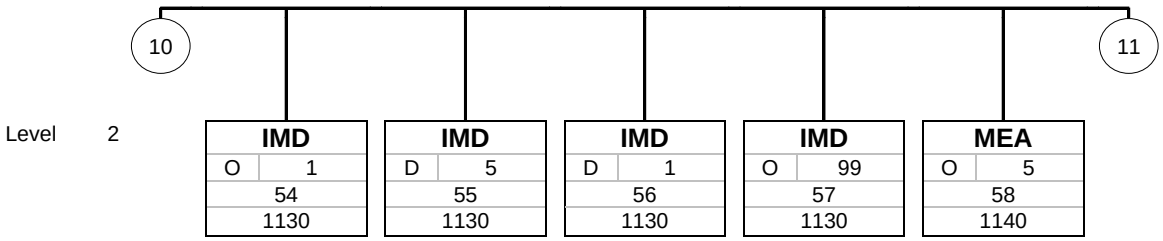

Name	
St	MaxOcc
No.	
Index	

Name = Segment-/Group-Name
St = Status (M=Mandatory, C=Conditional, R=Required, O=Optional, D=Dependent, A=Advised)
MaxOcc = Max. Occurence of Segment/Gruppe
No. = Segment-Number in Guide
Index = Segmente-Number (in Standard)

© 2019, IWOfurn Service GmbH

Message structure diagram (used Segments/Groups)

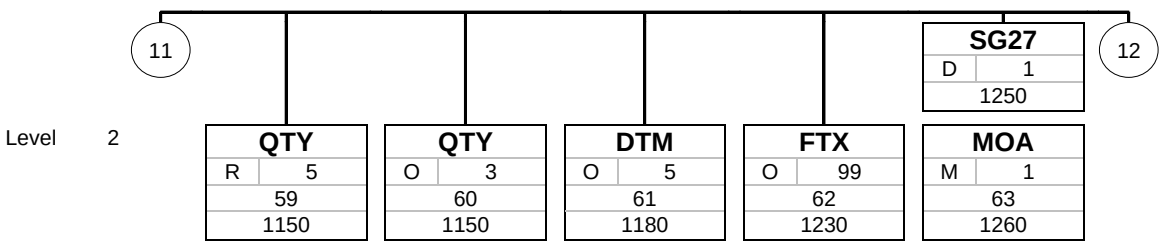

Name	
St	MaxOcc
No.	
Index	

Name = Segment-/Group-Name
St = Status (M=Mandatory, C=Conditional, R=Required, O=Optional, D=Dependent, A=Advised)
MaxOcc = Max. Occurence of Segment/Gruppe
No. = Segment-Number in Guide
Index = Segmente-Number (in Standard)

© 2019, IWOfurn Service GmbH

Message structure diagram (used Segments/Groups)

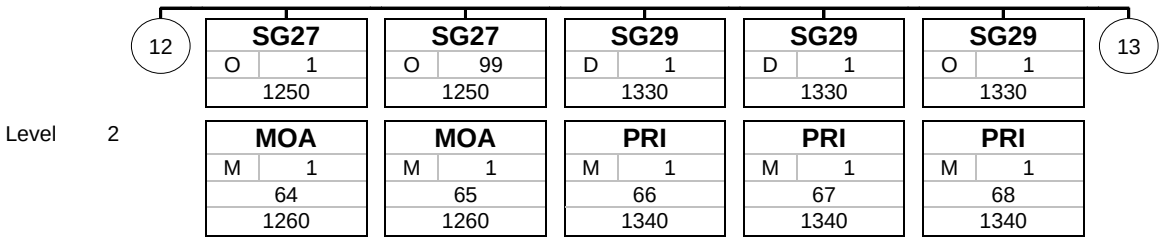

Name	
St	MaxOcc
No.	
Index	

Name = Segment-/Group-Name
St = Status (M=Mandatory, C=Conditional, R=Required, O=Optional, D=Dependent, A=Advised)
MaxOcc = Max. Occurence of Segment/Gruppe
No. = Segment-Number in Guide
Index = Segmente-Number (in Standard)

© 2019, IWOfurn Service GmbH

Message structure diagram (used Segments/Groups)

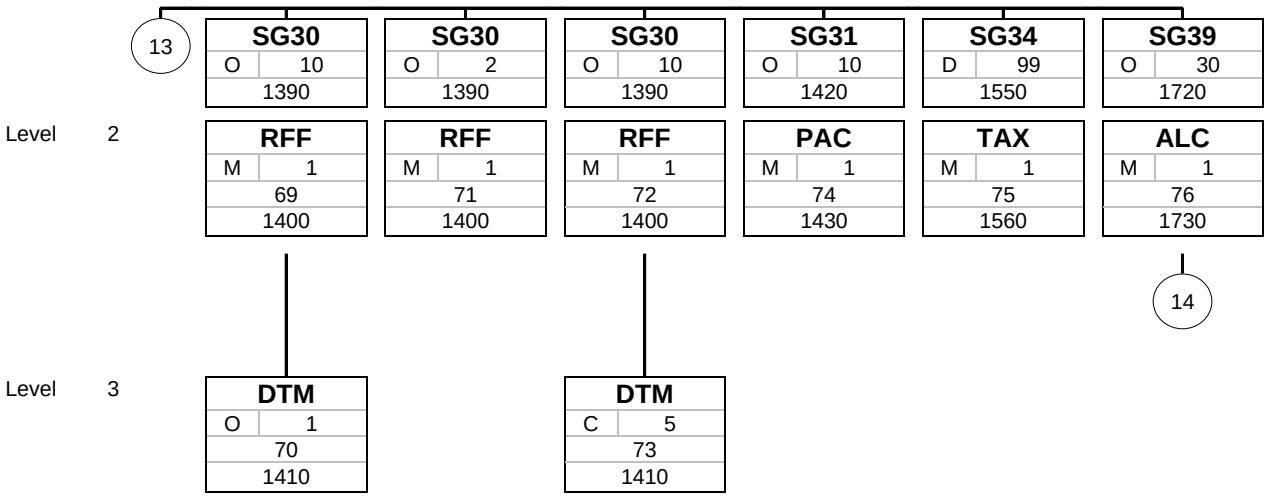

Name	
St	MaxOcc
No.	
Index	

Name = Segment-/Group-Name
St = Status (M=Mandatory, C=Conditional, R=Required, O=Optional, D=Dependent, A=Advised)
MaxOcc = Max. Occurence of Segment/Gruppe
No. = Segment-Number in Guide
Index = Segmente-Number (in Standard)

© 2019, IWOfurn Service GmbH

Message structure diagram (used Segments/Groups)

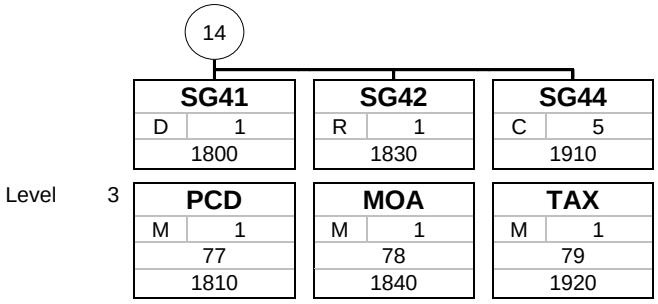

Name	
St	MaxOcc
No.	
Index	

Name = Segment-/Group-Name
St = Status (M=Mandatory, C=Conditional, R=Required, O=Optional, D=Dependent, A=Advised)
MaxOcc = Max. Occurence of Segment/Gruppe
No. = Segment-Number in Guide
Index = Segmente-Number (in Standard)

© 2019, IWOfurn Service GmbH

Message structure diagram (used Segments/Groups)

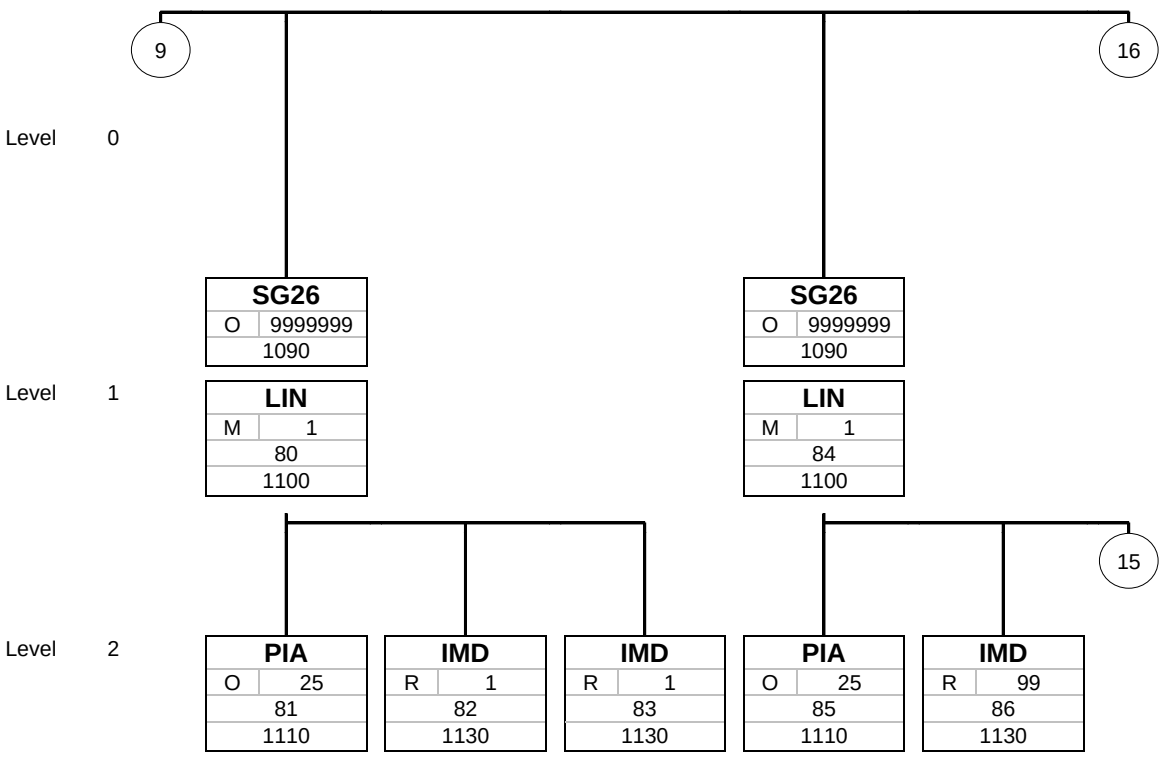

Name	
St	MaxOcc
No.	
Index	

Name = Segment-/Group-Name
St = Status (M=Mandatory, C=Conditional, R=Required, O=Optional, D=Dependent, A=Advised)
MaxOcc = Max. Occurence of Segment/Gruppe
No. = Segment-Number in Guide
Index = Segmente-Number (in Standard)

© 2019, IWOfurn Service GmbH

Message structure diagram (used Segments/Groups)

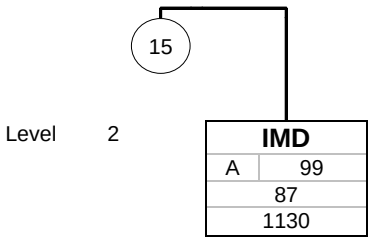

Name	Name = Segment-/Group-Name
St MaxOcc	St = Status (M=Mandatory, C=Conditional, R=Required, O=Optional, D=Dependent, A=Advised)
No.	MaxOcc = Max. Occurence of Segment/Gruppe
Index	No. = Segment-Number in Guide
	Index = Segmente-Number (in Standard)

© 2019, IWOfurn Service GmbH

Message structure diagram (used Segments/Groups)

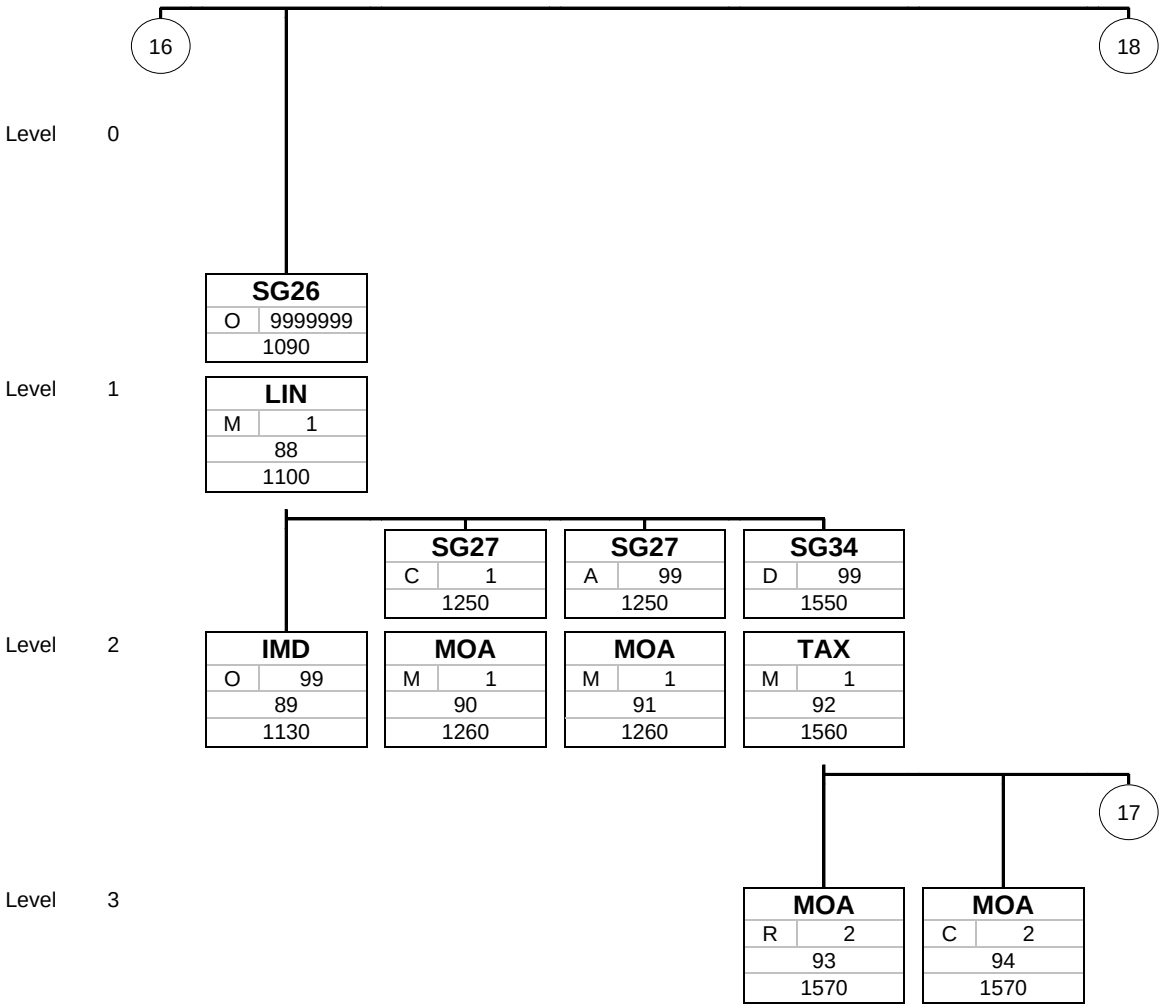

Name	
St	MaxOcc
No.	
Index	

Name = Segment-/Group-Name
St = Status (M=Mandatory, C=Conditional, R=Required, O=Optional, D=Dependent, A=Advised)
MaxOcc = Max. Occurence of Segment/Gruppe
No. = Segment-Number in Guide
Index = Segmente-Number (in Standard)

© 2019, IWOfurn Service GmbH

Message structure diagram (used Segments/Groups)

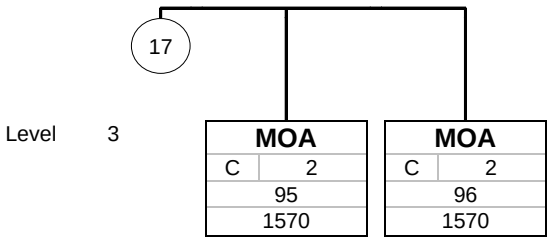

Name	
St	MaxOcc
No.	
Index	

Name = Segment-/Group-Name
St = Status (M=Mandatory, C=Conditional, R=Required, O=Optional, D=Dependent, A=Advised)
MaxOcc = Max. Occurence of Segment/Gruppe
No. = Segment-Number in Guide
Index = Segmente-Number (in Standard)

© 2019, IWOfurn Service GmbH

Message structure diagram (used Segments/Groups)

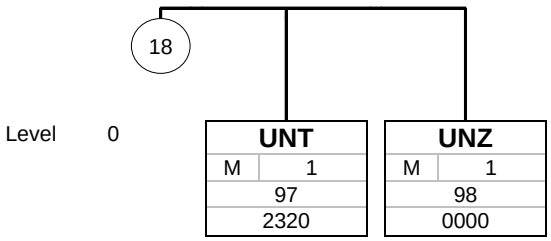

Name	
St	MaxOcc
No.	
Index	

Name = Segment-/Group-Name
St = Status (M=Mandatory, C=Conditional, R=Required, O=Optional, D=Dependent, A=Advised)
MaxOcc = Max. Occurence of Segment/Gruppe
No. = Segment-Number in Guide
Index = Segmente-Number (in Standard)

© 2019, IWOfurn Service GmbH

Segments

Index	No.	Tag	St	MaxOcc	Level	Description
0000	1	**UNA**	C	1	0	**Service string advice**

		Standard		Implementation		
Name	Description	St	Format	St	Format	Usage / Remark
UNA						
UNA1	Component data element separator	M	an1	M	an1	**: Composite separator**
UNA2	Data element separator	M	an1	M	an1	**+ Segment separator**
UNA3	Decimal notation	M	an1	M	an1	**. Decimal point**
UNA4	Release indicator	M	an1	M	an1	**? Masking character**
UNA5	Reserved for future use	M	an1	M	an1	Space character
UNA6	Segment terminator	M	an1	M	an1	**' Segment terminator character**

Remark:
This segment defines the characters reserved for this format.
Only the Edifact standard characters specified here apply to this format.

Example:
```
UNA:+.? '
```

Tag = Object-Name
No. = Segment-Number in Guide
MaxOcc = Max. Occurence of Segment/Group
Index = Index-Number of Segment/Group (in Standard)

St = Status
EDIFACT: M=Mandatory, C=Conditional
Usage: R=Required, O=Optional, D=Dependent, A=Advised, N=Not used

© 2019, IWOfurn Service GmbH

Segments

Index	No.	Tag	St	MaxOcc	Level	Description
0000	2	**UNB**	M	1	0	**Interchange header**

		Standard		Implementation		
Name	Description	St	Format	St	Format	Usage / Remark
UNB						
S001	Syntax identifier	M		M		
0001	Syntax identifier	M	a4	M	a4	**UNOC UN/ECE level C**
0002	Syntax version number	M	n1	M	n1	**3 Version 3**
S002	Interchange sender	M		M		
0004	Sender identification	M	an..35	R	an..35	**Sender identifier (GLN)**
0007	Partner identification code qualifier	C	an..4	R	an..4	**14 GS1** **ZZZ bilaterally agreed**
S003	Interchange recipient	M		M		
0010	Recipient identification	M	an..35	R	an..35	**Receiver identifier (GLN)**
0007	Partner identification code qualifier	C	an..4	R	an..4	**14 GS1** **ZZZ bilaterally agreed**
S004	Date/time of preparation	M		M		
0017	Date of preparation	M	n6	M	n6	Creation date of the EDIFACT file (YYMMDD)
0019	Time of preparation	M	n4	M	n4	Creation time of the EDIFACT file (HHMM)
0020	Interchange control reference	M	an..14	M	an..14	Unique data exchange reference number (file counter). Corresponds to the specification in UNZ 0020.
S005	Recipient's reference, password	C		N		
0022	Recipient's reference/password	M	an..14	N		Not used
0026	Application reference	C	an..14	O	an..14	**Name and version number of the sending system**
0029	Processing priority code	C	a1	N		Not used
0031	Acknowledgement request	C	n1	N		Not used
0032	Communications agreement ID	C	an..35	R	an..35	= "EANCOM_INVOIC_V3.00"

Remark:
This segment is used to uniquely identify the sender and recipient of the message.
The actual technical participant is specified here. This may differ from the information in the NAD segments.
Technical sender and recipient must be identifiable by a unique identification number (GLN).

In exceptional cases, other identification numbers that are not GLNs can also be used here. In these cases, the qualifier ZZZ must be used after bilateral agreement between sender and receiver.

Example:
`UNB+UNOC:3+4041116000009:14+4399901793453:14+20180524:0930+1+++++DCC-INVOIC-V1.0-Küche'`
The sender of the message is 4041116000009, the recipient is 4399901793453.
The message was created on 24.05.2018 at 09:30h and has the unique reference number 1.

Tag = Object-Name
No. = Segment-Number in Guide
MaxOcc = Max. Occurence of Segment/Group
Index = Index-Number of Segment/Group (in Standard)

St = Status
EDIFACT: M=Mandatory, C=Conditional
Usage: R=Required, O=Optional, D=Dependent, A=Advised, N=Not used

© 2019, IWOfurn Service GmbH

Segments

Index	No.	Tag	St	MaxOcc	Level	Description
		Message header				
0010	3	**UNH**	M	1	0	**Message header**

		Standard		Implementation		
Name	Description	St	Format	St	Format	Usage / Remark
UNH						
0062	Message reference number	M	an..14	M	an..14	
S009	Message identifier	M		M		
0065	Message type	M	an..6	M	an..6	**INVOIC Invoice message**
0052	Message version number	M	an..3	M	an..3	**D Draft version/UN/EDIFACT Directory**
0054	Message release number	M	an..3	M	an..3	**01B Release 2001 - B**
0051	Controlling agency	M	an..2	M	an..2	**UN UN/CEFACT**
0057	Association assigned code	C	an..6	R	an..6	**EAN010 GS1 version control number (GS1 Permanent Code)**

Remark:
This segment is used to open a message document.

Example:
```
UNH+1+INVOIC:D:01B:UN:EAN010'
```
This message is an Edifact INVOIC.

Tag = Object-Name
No. = Segment-Number in Guide
MaxOcc = Max. Occurence of Segment/Group
Index = Index-Number of Segment/Group (in Standard)

St = Status
EDIFACT: M=Mandatory, C=Conditional
Usage: R=Required, O=Optional, D=Dependent, A=Advised, N=Not used

© 2019, IWOfurn Service GmbH

Segments

Index	No.	Tag	St	MaxOcc	Level	Description
		Message header				
0020	4	**BGM**	M	1	0	**Document type and document number**

		Standard		Implementation		
Name	Description	St	Format	St	Format	Usage / Remark
BGM						
C002	Document/message name	C		C		
1001	Document name code	C	an..3	R	an..3	**380 Commercial invoice** **381 Credit note - goods and services** **83 Credit note related to financial adjustments** Credit information regarding financial corrections, e.g. bonuses. **84 Debit note related to financial adjustments** Encumbrance information regarding financial corrections **325 Proforma invoice** A proforma invoice represents a provisional invoice that corresponds to the final invoice but does not trigger payment.
C106	Document/message identification	C		C		
1004	Document identifier	C	an..35	R	an..35	Document number
1225	Message function code	C	an..3	R	an..3	Document control indicator **9 Original**

Remark:
In this segment the document type and the unique document number of the document issuer are specified

Example:
```
BGM+380+RE18129+9'
```
This document is a commercial invoice with document number RE18129.

Tag = Object-Name
No. = Segment-Number in Guide
MaxOcc = Max. Occurence of Segment/Group
Index = Index-Number of Segment/Group (in Standard)

St = Status
EDIFACT: M=Mandatory, C=Conditional
Usage: R=Required, O=Optional, D=Dependent, A=Advised, N=Not used

© 2019, IWOfurn Service GmbH

Segments

Index	No.	Tag	St	MaxOcc	Level	Description
		Message header				
0030	5	**DTM**	M	1	1	**Document date**

		Standard		Implementation		
Name	Description	St	Format	St	Format	Usage / Remark
DTM						
C507	Date/time/period	M		M		
2005	Date or time or period function code qualifier	M	an..3	M	an..3	Specifies the function of the date. **137 Document/message date/time**
2380	Date or time or period value	C	an..35	R	an..35	Document date
2379	Date or time or period format code	C	an..3	R	an..3	**102 CCYYMMDD**

Remark:
The creation date of the document.
Must be specified with code value 137 in the message

Example:
```
DTM+137:20180524:102'
```
The document was created on 24.05.2018.

Tag = Object-Name
No. = Segment-Number in Guide
MaxOcc = Max. Occurence of Segment/Group
Index = Index-Number of Segment/Group (in Standard)

St = Status
EDIFACT: M=Mandatory, C=Conditional
Usage: R=Required, O=Optional, D=Dependent, A=Advised, N=Not used

© 2019, IWOfurn Service GmbH

Segments

Index	No.	Tag	St	MaxOcc	Level	Description
		Message header				
0030	6	**DTM**	R	1	1	**Service date**

		Standard		Implementation		
Name	Description	St	Format	St	Format	Usage / Remark
DTM						
C507	Date/time/period	M		M		
2005	Date or time or period function code qualifier	M	an..3	M	an..3	Specifies the function of the date. **35 Delivery date/time, actual**
2380	Date or time or period value	C	an..35	C	an..35	Actual delivery date
2379	Date or time or period format code	C	an..3	C	an..3	**102 CCYYMMDD**

Remark:
Indicates the date when the service was performed for which the invoice was created.

Example:
```
DTM+35:20180503:102'
```
The performance date (corresponds to the delivery date) of the order is 05.05.2018

Tag = Object-Name
No. = Segment-Number in Guide
MaxOcc = Max. Occurence of Segment/Group
Index = Index-Number of Segment/Group (in Standard)

St = Status
EDIFACT: M=Mandatory, C=Conditional
Usage: R=Required, O=Optional, D=Dependent, A=Advised, N=Not used

© 2019, IWOfurn Service GmbH

Segments

Index	No.	Tag	St	MaxOcc	Level	Description
		Message header				
0030	7	**DTM**	O	35	1	**Other dates**

		Standard		Implementation		
Name	Description	St	Format	St	Format	Usage / Remark
DTM						
C507	Date/time/period	M		M		
2005	Date or time or period function code qualifier	M	an..3	M	an..3	Specifies the function of the date. **200 Pick-up/collection date/time of cargo**
2380	Date or time or period value	C	an..35	R	an..35	Date
2379	Date or time or period format code	C	an..3	R	an..3	**102 CCYYMMDD** **203 CCYYMMDDHHMM**

Remark:
e.g. : Pick-up Date: Specifies the date when the goods were accepted by the carrier.
Other dates.
Codes used must be agreed upon bilaterally.

Example:
```
DTM+200:20180428:102'
```
The shipment was handed over to the carrier on 28.04.2018

Tag = Object-Name
No. = Segment-Number in Guide
MaxOcc = Max. Occurence of Segment/Group
Index = Index-Number of Segment/Group (in Standard)

St = Status
EDIFACT: M=Mandatory, C=Conditional
Usage: R=Required, O=Optional, D=Dependent, A=Advised, N=Not used

© 2019, IWOfurn Service GmbH

Segments

Index	No.	Tag	St	MaxOcc	Level	Description
		Message header				
0050	8	**ALI**	O	5	1	**Order type**

		Standard		Implementation		
Name	Description	St	Format	St	Format	Usage / Remark
ALI						
3239	Country of origin name code	C	an..3	N		Not used
9213	Duty regime type code	C	an..3	N		Not used
4183	Special condition code	C	an..3	C	an..3	Order type **000 Standard stock order** **050 Standard commission order** **100 Promotional** **200 Initial setup** **220 Exhibition; pattern; placement** **250 New opening** **300 Spare parts delivery without charge** **350 Spare parts delivery with calculation** **400 Complaint order**

Remark:
The type of order, e.g. promotional goods or spare parts delivery.

Example:
```
ALI+++000'
```
This is a standard stock order

Tag = Object-Name
No. = Segment-Number in Guide
MaxOcc = Max. Occurence of Segment/Group
Index = Index-Number of Segment/Group (in Standard)

St = Status
EDIFACT: M=Mandatory, C=Conditional
Usage: R=Required, O=Optional, D=Dependent, A=Advised, N=Not used

© 2019, IWOfurn Service GmbH

Segments

Index	No.	Tag	St	MaxOcc	Level	Description
		Message header				
0070	9	**FTX**	O	49	1	**Free text information**

		Standard		Implementation		
Name	Description	St	Format	St	Format	Usage / Remark
FTX						
4451	Text subject code qualifier	M	an..3	M	an..3	**AAK Text on the reduction of remuneration** **REG Text on intra-Community supply** **AAI General information**
4453	Free text function code	C	an..3	R	an..3	**1 Text for subsequent use**
C107	Text reference	C		N		
4441	Free text value code	M	an..17	N		Not used
C108	Text literal	C		R		
4440	Free text value	M	an..512	M	an..512	Free text field 1
4440	Free text value	C	an..512	O	an..512	Free text field 2
4440	Free text value	C	an..512	O	an..512	Free text field 3
4440	Free text value	C	an..512	O	an..512	Free text field 4
4440	Free text value	C	an..512	O	an..512	Free text field 5

Remark:
Header level text information
May contain e.g. bilaterally agreed texts

Example:
```
FTX+REG+1++steuerfreie innergemeinschaftliche Lieferung'
```
It is a tax-free intra-Community supply.

```
FTX+AAK+1++Es ergeben sich Entgeltminderungen auf Grund von Rabatt- oder Bonusvereinbarungen'
```
Text on the reduction of remuneration

Tag = Object-Name
No. = Segment-Number in Guide
MaxOcc = Max. Occurence of Segment/Group
Index = Index-Number of Segment/Group (in Standard)

St = Status
EDIFACT: M=Mandatory, C=Conditional
Usage: R=Required, O=Optional, D=Dependent, A=Advised, N=Not used

© 2019, IWOfurn Service GmbH

Segments

Index	No.	Tag	St	MaxOcc	Level	Description
		Message Header				
0070	10	**FTX**	O	99	1	**File attachments**

		Standard		Implementation		
Name	Description	St	Format	St	Format	Usage / Remark
FTX						
4451	Text subject code qualifier	M	an..3	M	an..3	**MUL Attached file**
4453	Free text function code	C	an..3	C	an..3	**1 Text for subsequent use**
C107	Text reference	C		O		
4441	Free text value code	M	an..17	M	an..17	**1 EDIGRAPH** **11 JPEG** **50 PDF**
C108	Text literal	C		O		
4440	Free text value	M	an..512	M	an..30	**Filename**
4440	Free text value	C	an..512	R	an..30	**File type code** **1 EDIGRPAH** **11 Floor plan** **21 Wall/front view** **22 Tile plan** **23 Installation plan** **31 Perspective** **41 base sketch** **42 Countertop sketch** **43 WAP sketch** **44 Lightbar sketch** **45 Wreath sketch** **46 Topsoil sketch** **90 Commercial order confirmation** **99 Other**
4440	Free text value	C	an..512	O	an..30	**Description** Free text description of the contents of the file

Remark:
Information about files that will be transmitted with the EDI message. (e.g. images or PDFs)
The file name including extension must not be longer than 128 characters.
The following characters are defined as forbidden characters within the file names: ;$%&[]{} plus the characters specified via the Operating system Windows forbidden characters |<>?*:/\" . Spaces are allowed, tab characters and return characters not. If the file name contains an apostrophe ', it must be masked with a question mark. Example: " ?'".

Example:
```
FTX+MUL+1+50+Rechnung.pdf:99:Rechnungskopie'
```
There is a copy of the invoice attached in PDF format

```
FTX+MUL+1+50+GRD2873.pdf+11+Grundrissplan aus Planungssystem'
```
There is a floor plan (PDF file) attached with the file name GRD2873.pdf.

Tag = Object-Name
No. = Segment-Number in Guide
MaxOcc = Max. Occurence of Segment/Group
Index = Index-Number of Segment/Group (in Standard)

St = Status
EDIFACT: M=Mandatory, C=Conditional
Usage: R=Required, O=Optional, D=Dependent, A=Advised, N=Not used

© 2019, IWOfurn Service GmbH

Segments

Index	No.	Tag	St	MaxOcc	Level	Description
0120		**SG1**	O	1	1	**Reference / Commission number**
		Message Header				
0130	11	**RFF**	M	1	1	**Commission details**

		Standard		Implementation		
Name	Description	St	Format	St	Format	Usage / Remark
RFF						
C506	Reference	M		M		
1153	Reference code qualifier	M	an..3	M	an..3	**CR Commission number** **UC Commission name**
1154	Reference identifier	C	an..70	C	an..70	**Commission number or name from customer order**

Remark:
The specification of a commission number (C506,1153="CR") is mandatory, the specification of the Commission name (C506,1153="UC") is optional.

The structure of the commission number is not subject to any rules and can be freely chosen by the sending system.
can be used. If the sending system uses only the segment for the transmission of the commission number, this can also contain the commission name, e.g. "4711/01, MÃ¼ller".
A unique reference number must be supplied, which consistently identifies an order process identified. As a rule, this is the commission number "CR".

When receiving an order confirmation (EANCOM-ORDRSP), the manufacturer's system expects that the Commission number (C506,1153="CR") is transmitted back unchanged, so that a clear assignment between the order and the order confirmation is given.

Example:
`RFF+CR:OBJ2638'`
The commission number is OBJ2638

`RFF+UC:Mueller Lohe'`
The kitchen commission name is "Mueller Lohe."

Tag = Object-Name
No. = Segment-Number in Guide
MaxOcc = Max. Occurence of Segment/Group
Index = Index-Number of Segment/Group (in Standard)

St = Status
EDIFACT: M=Mandatory, C=Conditional
Usage: R=Required, O=Optional, D=Dependent, A=Advised, N=Not used

© 2019, IWOfurn Service GmbH

Segments

Index	No.	Tag	St	MaxOcc	Level	Description
0120		**SG1**	R	1	1	**Reference / Order number**
		Message header				
0130	12	**RFF**	M	1	1	**Order number**

		Standard		Implementation		
Name	Description	St	Format	St	Format	Usage / Remark
RFF						
C506	Reference	M		M		
1153	Reference code qualifier	M	an..3	M	an..3	**ON Order number (buyer)**
1154	Reference identifier	C	an..70	R	an..70	Document number of the order

Remark:
In this segment, the customer's order number is usually passed, to which all return messages refer.

Example:
```
RFF+ON:BE7732'
```
The document number of the order is BE7732

Tag = Object-Name
No. = Segment-Number in Guide
MaxOcc = Max. Occurence of Segment/Group
Index = Index-Number of Segment/Group (in Standard)

St = Status
EDIFACT: M=Mandatory, C=Conditional
Usage: R=Required, O=Optional, D=Dependent, A=Advised, N=Not used

© 2019, IWOfurn Service GmbH

Segments

Index	No.	Tag	St	MaxOcc	Level	Description
0120		**SG1**	R	1	1	**Reference / Order number**
		Message header				
0140	13	**DTM**	O	5	2	**Date of the order document**

		Standard		Implementation		
Name	Description	St	Format	St	Format	Usage / Remark
DTM						
C507	Date/time/period	M		M		
2005	Date or time or period function code qualifier	M	an..3	M	an..3	**171 Reference date/time**
2380	Date or time or period value	C	an..35	R	an..35	Order date
2379	Date or time or period format code	C	an..3	R	an..3	**102 CCYYMMDD**

Remark:
Date when the order was created (DTM+137 of the order)

Example:
```
DTM+171:20180427:102'
```
The document date of the order is 27.04.2018

Tag = Object-Name
No. = Segment-Number in Guide
MaxOcc = Max. Occurence of Segment/Group
Index = Index-Number of Segment/Group (in Standard)

St = Status
EDIFACT: M=Mandatory, C=Conditional
Usage: R=Required, O=Optional, D=Dependent, A=Advised, N=Not used

© 2019, IWOfurn Service GmbH

Segments

Index	No.	Tag	St	MaxOcc	Level	Description
0120		**SG1**	O	1	1	**Reference / barcode number**
		Message header				
0130	14	**RFF**	M	1	1	**Barcode number**

		Standard		Implementation		
Name	Description	St	Format	St	Format	Usage / Remark
RFF						
C506	Reference	M		M		
1153	Reference code qualifier	M	an..3	M	an..3	**ABO Originator's reference**
1154	Reference identifier	C	an..70	R	an..70	Barcode number

Remark:
Barcode number for internal use or unique document archiving.

Example:
```
RFF+ABO:XAD376S'
```
The unique barcode number/document archive number is XAD376S.

Tag = Object-Name
No. = Segment-Number in Guide
MaxOcc = Max. Occurence of Segment/Group
Index = Index-Number of Segment/Group (in Standard)

St = Status
EDIFACT: M=Mandatory, C=Conditional
Usage: R=Required, O=Optional, D=Dependent, A=Advised, N=Not used

© 2019, IWOfurn Service GmbH

Segments

Index	No.	Tag	St	MaxOcc	Level	Description
0120		**SG1**	O	1	1	**Reference / Order response**
		Message header				
0130	15	**RFF**	M	1	1	**Order response number**

		Standard		Implementation		
Name	Description	St	Format	St	Format	Usage / Remark
RFF						
C506	Reference	M		M		
1153	Reference code qualifier	M	an..3	M	an..3	**POR Purchase order response number**
1154	Reference identifier	C	an..70	R	an..70	Document number of the order response

Remark:
Reference to the order confirmation number

Example:
```
RFF+POR:AB123456'
```
The order response number is AB123456

Tag = Object-Name
No. = Segment-Number in Guide
MaxOcc = Max. Occurence of Segment/Group
Index = Index-Number of Segment/Group (in Standard)

St = Status
EDIFACT: M=Mandatory, C=Conditional
Usage: R=Required, O=Optional, D=Dependent, A=Advised, N=Not used

© 2019, IWOfurn Service GmbH

Segments

Index	No.	Tag	St	MaxOcc	Level	Description
0120		**SG1**	O	1	1	**Reference / Order response**
		Message header				
0140	16	**DTM**	O	5	2	**Date of order response**

		Standard		Implementation		
Name	Description	St	Format	St	Format	Usage / Remark
DTM						
C507	Date/time/period	M		M		
2005	Date or time or period function code qualifier	M	an..3	M	an..3	**171 Reference date/time**
2380	Date or time or period value	C	an..35	R	an..35	Date
2379	Date or time or period format code	C	an..3	R	an..3	**102 CCYYMMDD**

Remark:

Example:

```
DTM+171:20180427:102'
```

The document date is 27.04.2018

Tag = Object-Name
No. = Segment-Number in Guide
MaxOcc = Max. Occurence of Segment/Group
Index = Index-Number of Segment/Group (in Standard)

St = Status
EDIFACT: M=Mandatory, C=Conditional
Usage: R=Required, O=Optional, D=Dependent, A=Advised, N=Not used

© 2019, IWOfurn Service GmbH

Segments

Index	No.	Tag	St	MaxOcc	Level	Description
0120		**SG1**	O	1	1	**Reference / Delivery note**
		Message header				
0130	17	**RFF**	M	1	1	**Delivery note number**

		Standard		Implementation		
Name	Description	St	Format	St	Format	Usage / Remark
RFF						
C506	Reference	M		M		
1153	Reference code qualifier	M	an..3	M	an..3	**DQ Delivery note number**
1154	Reference identifier	C	an..70	C	an..70	

Remark:
Delivery note number:
Reference to the delivery note number

Example:
```
RFF+DQ:LI4872924'
```
The delivery note number is LI4872924

Tag = Object-Name
No. = Segment-Number in Guide
MaxOcc = Max. Occurence of Segment/Group
Index = Index-Number of Segment/Group (in Standard)

St = Status
EDIFACT: M=Mandatory, C=Conditional
Usage: R=Required, O=Optional, D=Dependent, A=Advised, N=Not used

© 2019, IWOfurn Service GmbH

Segments

Index	No.	Tag	St	MaxOcc	Level	Description
0120		**SG1**	O	1	1	**Reference / Delivery note**
		Message header				
0140	18	**DTM**	O	5	2	**Creation date of the delivery note**

		Standard		Implementation		
Name	Description	St	Format	St	Format	Usage / Remark
DTM						
C507	Date/time/period	M		M		
2005	Date or time or period function code qualifier	M	an..3	M	an..3	**171 Reference date/time**
2380	Date or time or period value	C	an..35	R	an..35	Date to referenced document
2379	Date or time or period format code	C	an..3	R	an..3	**102 CCYYMMDD**

Remark:
Creation date of the delivery note

Example:
```
DTM+171:20180131:102'
```
The document date of the delivery note is 31.01.2018

Tag = Object-Name
No. = Segment-Number in Guide
MaxOcc = Max. Occurence of Segment/Group
Index = Index-Number of Segment/Group (in Standard)

St = Status
EDIFACT: M=Mandatory, C=Conditional
Usage: R=Required, O=Optional, D=Dependent, A=Advised, N=Not used

© 2019, IWOfurn Service GmbH

Segments

Index	No.	Tag	St	MaxOcc	Level	Description
0120		**SG1**	O	1	1	**Reference / Previous invoice**
		Message header				
0130	19	**RFF**	M	1	1	**Previous invoice**

		Standard		Implementation		
Name	Description	St	Format	St	Format	Usage / Remark
RFF						
C506	Reference	M		M		
1153	Reference code qualifier	M	an..3	M	an..3	**OI Reference to the previously issued invoice**
1154	Reference identifier	C	an..70	R	an..70	

Remark:
Reference to the previously issued invoice.

Example:
```
RFF+OI:RE18120/V'
```
The invoice number of the previously issued invoice is RE18120/V

Tag = Object-Name
No. = Segment-Number in Guide
MaxOcc = Max. Occurence of Segment/Group
Index = Index-Number of Segment/Group (in Standard)

St = Status
EDIFACT: M=Mandatory, C=Conditional
Usage: R=Required, O=Optional, D=Dependent, A=Advised, N=Not used

© 2019, IWOfurn Service GmbH

Segments

Index	No.	Tag	St	MaxOcc	Level	Description
0120		**SG1**	O	1	1	**Reference / Previous invoice**
		Message header				
0140	20	**DTM**	C	5	2	**Date of the previously issued invoice.**

		Standard		Implementation		
Name	Description	St	Format	St	Format	Usage / Remark
DTM						
C507	Date/time/period	M		M		
2005	Date or time or period function code qualifier	M	an..3	M	an..3	**171 Reference date/time**
2380	Date or time or period value	C	an..35	R	an..35	
2379	Date or time or period format code	C	an..3	R	an..3	**102 CCYYMMDD**

Remark:

Example:

```
DTM+171:20180428:102'
```

The previous invoice was issued on 28.04.2018.

Tag = Object-Name
No. = Segment-Number in Guide
MaxOcc = Max. Occurence of Segment/Group
Index = Index-Number of Segment/Group (in Standard)

St = Status
EDIFACT: M=Mandatory, C=Conditional
Usage: R=Required, O=Optional, D=Dependent, A=Advised, N=Not used

© 2019, IWOfurn Service GmbH

Segments

Index	No.	Tag	St	MaxOcc	Level	Description
0120		**SG1**	O	999	1	**Additional reference information**
		Message header				
0130	21	**RFF**	M	1	1	**Additional document reference**

		Standard		Implementation		
Name	Description	St	Format	St	Format	Usage / Remark
RFF						
C506	Reference	M		M		
1153	Reference code qualifier	M	an..3	M	an..3	**OP Reference to the original customer order**
1154	Reference identifier	C	an..70	R	an..70	Additional document reference

Remark:
Additional document reference:
e.g. planning IDs or external documents
Other codes possible by bilateral agreement.

Example:
`RFF+OP:627482345672'`
The original sales order number (e.g. order number from online store) is 627482345672

Tag = Object-Name
No. = Segment-Number in Guide
MaxOcc = Max. Occurence of Segment/Group
Index = Index-Number of Segment/Group (in Standard)

St = Status
EDIFACT: M=Mandatory, C=Conditional
Usage: R=Required, O=Optional, D=Dependent, A=Advised, N=Not used

© 2019, IWOfurn Service GmbH

Segments

Index	No.	Tag	St	MaxOcc	Level	Description
0120		**SG1**	O	999	1	**Additional reference information**
		Message header				
0140	22	**DTM**	O	5	2	**Document creation date**

		Standard		Implementation		
Name	Description	St	Format	St	Format	Usage / Remark
DTM						
C507	Date/time/period	M		M		
2005	Date or time or period function code qualifier	M	an..3	M	an..3	**171 Reference date/time**
2380	Date or time or period value	C	an..35	R	an..35	Date of the referenced document
2379	Date or time or period format code	C	an..3	R	an..3	**102 CCYYMMDD**

Remark:
Document creation date

Example:
```
DTM+171:20180131:102'
```
The document date of the referenced document is 31.01.2018

Tag = Object-Name
No. = Segment-Number in Guide
MaxOcc = Max. Occurence of Segment/Group
Index = Index-Number of Segment/Group (in Standard)

St = Status
EDIFACT: M=Mandatory, C=Conditional
Usage: R=Required, O=Optional, D=Dependent, A=Advised, N=Not used

© 2019, IWOfurn Service GmbH

Segments

Index	No.	Tag	St	MaxOcc	Level	Description
0220		**SG2**	R	99	1	**Names and addresses of the parties involved**
		Message header				
0230	23	**NAD**	M	1	1	**Name and address**

		Standard		Implementation		
Name	Description	St	Format	St	Format	Usage / Remark
NAD						
3035	Party function code qualifier	M	an..3	M	an..3	**BY Buyer** **SU Supplier** **DP Delivery party** **IV Invoicee** **UC End customer Ship-to party** **UD End customer Invoice recipient, if different from UC** **CA Carrier** **PL Central regulator** **PO Client of the transport order** **PW Pickup address/delivery point** **PF Recipient of the freight invoice** **FW Selected transport company** **MA Assembly address**
C082	Party identification details	C		A		
3039	Party identifier	M	an..35	M	an..35	**Identification number (GLN)**
1131	Code list identification code	C	an..17	N		Not used
3055	Code list responsible agency code	C	an..3	R	an..3	**9 GS1** **91 Assigned by supplier or supplier's agent** **92 Assigned by buyer or buyer's agent**
C058	Name and address	C		N		
3124	Name and address description	M	an..35	N		Not used
C080	Party name	C		C		
3036	Party name	M	an..35	M	an..35	**Name** For companies : company name For individuals: firstname lastname
3036	Party name	C	an..35	O	an..35	For companies: company name continuation For individuals: blank
3036	Party name	C	an..35	O	an..35	For companies: blank For individuals: firstname
3036	Party name	C	an..35	O	an..35	For companies: blank For individuals: lastname
C059	Street	C		C		
3042	Street and number or post office box identifier	M	an..35	M	an..35	**Street and house number**
3042	Street and number or post office box identifier	C	an..35	O	an..35	
3042	Street and number or post office box identifier	C	an..35	O	an..35	
3042	Street and number or post office box identifier	C	an..35	O	an..35	
3164	City name	C	an..35	C	an..35	**Location**
C819	Country sub-entity details	C		N		
3229	Country sub-entity name code	C	an..9	N		Not used
3251	Postal identification code	C	an..17	C	an..17	**Postal code**
3207	Country name code	C	an..3	C	an..3	**Country code (2 digits, ISO)** e.g..: DE , AT ...

Tag = Object-Name
No. = Segment-Number in Guide
MaxOcc = Max. Occurence of Segment/Group
Index = Index-Number of Segment/Group (in Standard)

St = Status
EDIFACT: M=Mandatory, C=Conditional
Usage: R=Required, O=Optional, D=Dependent, A=Advised, N=Not used

© 2019, IWOfurn Service GmbH

Segments

Remark:
Address information:
GLN, name and address of the parties involved.
It is recommended to include the name and complete address in addition to the GLN.
The use of GLN numbers is also recommended. In exceptional cases, other codes can be used here bilaterally agreed, then the code 91 or 92 must be entered in field 3055.

If the specification of a unique identification number is not possible (e.g. for end customer addresses), this can be omitted (Fedl 3055 then remains empty), otherwise this must be specified.

Example:
`NAD+BY+8765432123456::9'`
The GLN of the buyer is 8765432123456

`NAD+DP++Hans Meyer+Musterstraße 1+Musterstadt+77777+DE'`
The shipping address is:
Hans Meyer
Sample street 1
77777 Sample city
Germany

© 2019, IWOfurn Service GmbH

Segments

Index	No.	Tag	St	MaxOcc	Level	Description
0220		**SG2**	R	99	1	**Names and addresses of the parties involved**
		Message header				
0270		**SG3**	O	1	2	**Sales tax ID**
0280	24	**RFF**	M	1	2	**Sales tax ID**

		Standard		Implementation		
Name	Description	St	Format	St	Format	Usage / Remark
RFF						
C506	Reference	M		M		
1153	Reference code qualifier	M	an..3	M	an..3	**VA VAT registration number**
1154	Reference identifier	C	an..70	R	an..70	**Sales tax identification number**

Remark:
The sales tax identification number is often expected by the recipient.

Example:
```
RFF+VA:DE4324789142'
```
The VAT ID of the party concerned is DE4324789142

Tag = Object-Name
No. = Segment-Number in Guide
MaxOcc = Max. Occurence of Segment/Group
Index = Index-Number of Segment/Group (in Standard)

St = Status
EDIFACT: M=Mandatory, C=Conditional
Usage: R=Required, O=Optional, D=Dependent, A=Advised, N=Not used

© 2019, IWOfurn Service GmbH

Segments

Index	No.	Tag	St	MaxOcc	Level	Description
0220		**SG2**	R	99	1	**Names and addresses of the parties involved**
		Message header				
0270		**SG3**	O	1	2	**Tax number**
0280	25	**RFF**	M	1	2	**Tax number**

		Standard		Implementation		
Name	Description	St	Format	St	Format	Usage / Remark
RFF						
C506	Reference	M		M		
1153	Reference code qualifier	M	an..3	M	an..3	**FC Fiscal number**
1154	Reference identifier	C	an..70	R	an..70	**Tax number**

Remark:
Like sales tax ID, required by some recipients.

Example:
```
RFF+FC:12345-131312'
```
The tax number of the party involved is 12345-131312

Tag = Object-Name
No. = Segment-Number in Guide
MaxOcc = Max. Occurence of Segment/Group
Index = Index-Number of Segment/Group (in Standard)

St = Status
EDIFACT: M=Mandatory, C=Conditional
Usage: R=Required, O=Optional, D=Dependent, A=Advised, N=Not used

© 2019, IWOfurn Service GmbH

Segments

Index	No.	Tag	St	MaxOcc	Level	Description
0220		**SG2**	R	99	1	**Names and addresses of the parties involved**
		Message header				
0270		**SG3**	O	1	2	**Identification number at the central regulator**
0280	26	**RFF**	M	1	2	**Identification number at the central regulator**

		Standard		Implementation		
Name	Description	St	Format	St	Format	Usage / Remark
RFF						
C506	Reference	M		M		
1153	Reference code qualifier	M	an..3	M	an..3	**AGB Membership number/customer number**
1154	Reference identifier	C	an..70	R	an..70	**ZR number** Customer number of the participant at the central regulator

Remark:
The identification number at the central regulator is expected only at the invoice recipient (NAD+IV) and the supplier (NAD+SU).

Example:
```
RFF+AGB:832637'
```
The customer number at the central regulator is 832637

Tag = Object-Name
No. = Segment-Number in Guide
MaxOcc = Max. Occurence of Segment/Group
Index = Index-Number of Segment/Group (in Standard)

St = Status
EDIFACT: M=Mandatory, C=Conditional
Usage: R=Required, O=Optional, D=Dependent, A=Advised, N=Not used

© 2019, IWOfurn Service GmbH

Segments

Index	No.	Tag	St	MaxOcc	Level	Description
0220		**SG2**	R	99	1	**Names and addresses of the parties involved**
		Message header				
0270		**SG3**	O	1	2	**Contract number**
0280	27	**RFF**	M	1	2	**Contract number**

		Standard		Implementation		
Name	Description	St	Format	St	Format	Usage / Remark
RFF						
C506	Reference	M		M		
1153	Reference code qualifier	M	an..3	M	an..3	**CT Partner identification at the central regulator**
1154	Reference identifier	C	an..70	R	an..70	**Contract number**

Remark:
The contract number can be specified here.

Example:
`RFF+CT:VAB-938/18'`
The contract number is VAB-938/18

Tag = Object-Name
No. = Segment-Number in Guide
MaxOcc = Max. Occurence of Segment/Group
Index = Index-Number of Segment/Group (in Standard)

St = Status
EDIFACT: M=Mandatory, C=Conditional
Usage: R=Required, O=Optional, D=Dependent, A=Advised, N=Not used

© 2019, IWOfurn Service GmbH

Segments

Index	No.	Tag	St	MaxOcc	Level	Description
0220		**SG2**	R	99	1	**Names and addresses of the parties involved**
		Message header				
0270		**SG3**	O	1	2	**Customer number**
0280	28	**RFF**	M	1	2	**Customer number**

		Standard		Implementation		
Name	Description	St	Format	St	Format	Usage / Remark
RFF						
C506	Reference	M		M		
1153	Reference code qualifier	M	an..3	M	an..3	**IT Internal customer number**
1154	Reference identifier	C	an..70	R	an..70	**Customer number**

Remark:
Number of the buyer at the manufacturer

Example:
`RFF+IT:KD98234'`
The customer number is KD98234

Tag = Object-Name
No. = Segment-Number in Guide
MaxOcc = Max. Occurence of Segment/Group
Index = Index-Number of Segment/Group (in Standard)

St = Status
EDIFACT: M=Mandatory, C=Conditional
Usage: R=Required, O=Optional, D=Dependent, A=Advised, N=Not used

© 2019, IWOfurn Service GmbH

Segments

Index	No.	Tag	St	MaxOcc	Level	Description
0220		**SG2**	R	99	1	**Names and addresses of the parties involved**
		Message header				
0270		**SG3**	O	1	2	**WEEE reg. No.**
0280	29	**RFF**	M	1	2	**WEEE reg. No.**

		Standard		Implementation		
Name	Description	St	Format	St	Format	Usage / Remark
RFF						
C506	Reference	M		M		
1153	Reference code qualifier	M	an..3	M	an..3	**XA WEEE reg. no.**
1154	Reference identifier	C	an..70	R	an..70	**WEEE registration number** The WEEE registration number of the party

Remark:
Here you can enter the registration number that identifies the participant according to EU WEEE Regulations.

Example:
```
RFF+XA:DE 12345678'
```
The WEEE registration number is DE 12345678

Tag = Object-Name
No. = Segment-Number in Guide
MaxOcc = Max. Occurence of Segment/Group
Index = Index-Number of Segment/Group (in Standard)

St = Status
EDIFACT: M=Mandatory, C=Conditional
Usage: R=Required, O=Optional, D=Dependent, A=Advised, N=Not used

© 2019, IWOfurn Service GmbH

Segments

Index	No.	Tag	St	MaxOcc	Level	Description
0220		**SG2**	R	99	1	**Names and addresses of the parties involved**
		Message header				
0330		**SG5**	O	5	2	**Contact person and communication data**
0340	30	**CTA**	M	1	2	**Contact person or department**

		Standard		Implementation		
Name	Description	St	Format	St	Format	Usage / Remark
CTA						
3139	Contact function code	C	an..3	C	an..3	**MGR Manager (GS1 Temporary Code)** **AD Accounting contact** **OC Order contact**
C056	Department or employee details	C		O		
3413	Department or employee name code	C	an..17	O	an..17	Identifier of the contact person or department
3412	Department or employee name	C	an..35	O	an..35	Name of the contact person or department

Remark:
Name of contact person or department

Example:
```
CTA+MGR+EK:Einkauf'
```
Contact person is the purchasing manager

Tag = Object-Name
No. = Segment-Number in Guide
MaxOcc = Max. Occurence of Segment/Group
Index = Index-Number of Segment/Group (in Standard)

St = Status
EDIFACT: M=Mandatory, C=Conditional
Usage: R=Required, O=Optional, D=Dependent, A=Advised, N=Not used

© 2019, IWOfurn Service GmbH

Segments

Index	No.	Tag	St	MaxOcc	Level	Description
0220		**SG2**	R	99	1	**Names and addresses of the parties involved**
		Message header				
0330		**SG5**	O	5	2	**Contact person and communication data**
0350	31	**COM**	O	5	3	**Communication contact**

		Standard		Implementation		
Name	Description	St	Format	St	Format	Usage / Remark
COM						
C076	Communication contact	M		M		
3148	Communication address identifier	M	an..512	M	an..512	Communication address of the contact person or department
3155	Communication address code qualifier	M	an..3	M	an..3	**TE Telephone** **AL Cell phone number** **EM Email address** **FX Fax**

Remark:
Communication details (phone, fax, email) of the contact person or department.

Example:
```
COM+0711 1234567:TE'
```
The phone number is 0711/1234567

Tag = Object-Name
No. = Segment-Number in Guide
MaxOcc = Max. Occurence of Segment/Group
Index = Index-Number of Segment/Group (in Standard)

St = Status
EDIFACT: M=Mandatory, C=Conditional
Usage: R=Required, O=Optional, D=Dependent, A=Advised, N=Not used

© 2019, IWOfurn Service GmbH

Segments

Index	No.	Tag	St	MaxOcc	Level	Description
0360		**SG6**	O	5	1	**Sales tax**
0370	32	**TAX**	M	1	1	**Duty/tax/fee details**

		Standard		Implementation		
Name	Description	St	Format	St	Format	Usage / Remark
TAX						
5283	Duty or tax or fee function code qualifier	M	an..3	M	an..3	**7 Tax**
C241	Duty/tax/fee type	C		R		
5153	Duty or tax or fee type name code	C	an..3	R	an..3	**VAT Value added tax**
C533	Duty/tax/fee account detail	C		N		
5289	Duty or tax or fee account code	M	an..6	N		Not used
5286	Duty or tax or fee assessment basis value	C	an..15	N		Not used
C243	Duty/tax/fee detail	C		R		
5279	Duty or tax or fee rate code	C	an..7	N		Not used
1131	Code list identification code	C	an..17	N		Not used
3055	Code list responsible agency code	C	an..3	N		Not used
5278	Duty or tax or fee rate	C	an..17	R	an..17	**Sales tax rate (in percent)**
5305	Duty or tax or fee category code	C	an..3	C	an..3	**S Standard rate** **E Exempt from tax**

Remark:
Value added tax specification

Example:
`TAX+7+VAT+++:::19+S'`
The applicable tax rate of the document is 19%.

© 2019, IWOfurn Service GmbH

Segments

Index	No.	Tag	St	MaxOcc	Level	Description
0400		**SG7**	C	99	1	**Currency**
0410	33	**CUX**	M	1	1	**Currencies**

		Standard		Implementation		
Name	Description	St	Format	St	Format	Usage / Remark
CUX						
C504	Currency details	C		C		
6347	Currency usage code qualifier	M	an..3	M	an..3	**2 Reference currency**
6345	Currency identification code	C	an..3	C	an..3	**EUR Euro**

Remark:

Example:
`CUX+2:EUR'`
The document was invoiced in EURO

© 2019, IWOfurn Service GmbH

Segments

Index	No.	Tag	St	MaxOcc	Level	Description
0430		**SG8**	O	10	1	**Payment term / Due date**
		Message header				
0440	34	**PAT**	M	1	1	**Payment term**

		Standard		Implementation		
Name	Description	St	Format	St	Format	Usage / Remark
PAT						
4279	Payment terms type code qualifier	M	an..3	M	an..3	**3 Fixed date**

Remark:
This segment group is used to specify payment target date without deduction.

Example:
```
PAT+3'
DTM+13:20180626:102'
```
The due date is specified as a fixed date and is 26.06.2018

© 2019, IWOfurn Service GmbH

Segments

Index	No.	Tag	St	MaxOcc	Level	Description
0430		**SG8**	O	10	1	**Payment term / Due date**
		Message header				
0450	35	**DTM**	R	5	2	**Due date**

		Standard		Implementation		
Name	Description	St	Format	St	Format	Usage / Remark
DTM						
C507	Date/time/period	M		M		
2005	Date or time or period function code qualifier	M	an..3	M	an..3	**13 Terms net due date**
2380	Date or time or period value	C	an..35	R	an..35	
2379	Date or time or period format code	C	an..3	R	an..3	**102 CCYYMMDD**

Remark:

Example:

```
DTM+13:20180525:102'
```

Tag = Object-Name
No. = Segment-Number in Guide
MaxOcc = Max. Occurence of Segment/Group
Index = Index-Number of Segment/Group (in Standard)

St = Status
EDIFACT: M=Mandatory, C=Conditional
Usage: R=Required, O=Optional, D=Dependent, A=Advised, N=Not used

© 2019, IWOfurn Service GmbH

Segments

Index	No.	Tag	St	MaxOcc	Level	Description
0430		**SG8**	O	10	1	**Terms of payment / Value date**
		Message header				
0440	36	**PAT**	M	1	1	**Payment term**

		Standard		Implementation		
Name	Description	St	Format	St	Format	Usage / Remark
PAT						
4279	Payment terms type code qualifier	M	an..3	M	an..3	**3 Fixed date**

Remark:
This segment group is used to specify the value date.

Example:
```
PAT+3'
DTM+209:20180625:102'
```
The value date is given as a fixed date and is 25.06.2018.

© 2019, IWOfurn Service GmbH

Segments

Index	No.	Tag	St	MaxOcc	Level	Description
0430		**SG8**	O	10	1	**Terms of payment / Value date**
		Message header				
0450	37	**DTM**	R	1	2	**Value date**

		Standard		Implementation		
Name	Description	St	Format	St	Format	Usage / Remark
DTM						
C507	Date/time/period	M		M		
2005	Date or time or period function code qualifier	M	an..3	M	an..3	**209 Value date**
2380	Date or time or period value	C	an..35	R	an..35	
2379	Date or time or period format code	C	an..3	R	an..3	**102 CCYYMMDD**

Remark:

Example:
```
DTM+209:20180525:102'
```
The value date is 25.05.2018

Tag = Object-Name
No. = Segment-Number in Guide
MaxOcc = Max. Occurence of Segment/Group
Index = Index-Number of Segment/Group (in Standard)

St = Status
EDIFACT: M=Mandatory, C=Conditional
Usage: R=Required, O=Optional, D=Dependent, A=Advised, N=Not used

© 2019, IWOfurn Service GmbH

Segments

Index	No.	Tag	St	MaxOcc	Level	Description
0430		**SG8**	O	10	1	**Payment term / Discount date**
		Message header				
0440	38	**PAT**	M	1	1	**Payment terms basis**

		Standard		Implementation		
Name	Description	St	Format	St	Format	Usage / Remark
PAT						
4279	Payment terms type code qualifier	M	an..3	M	an..3	**3 Fixed date**

Remark:
This segment group is used to specify the discount that can be deducted by the invoice recipient.
If discount is deducted during invoicing, an SG16 (ALC) must be used.

Example:

```
PAT+3'
PAT+3'
DTM+209:20180514:102'
PCD+12:9'
MOA+8:12.57:EUR'
```

The discount date is specified as a fixed date and is 14.05.2018.
A 9% discount may be deducted.
This corresponds to a discount in the amount of EUR 12.57.

Tag = Object-Name
No. = Segment-Number in Guide
MaxOcc = Max. Occurence of Segment/Group
Index = Index-Number of Segment/Group (in Standard)

St = Status
EDIFACT: M=Mandatory, C=Conditional
Usage: R=Required, O=Optional, D=Dependent, A=Advised, N=Not used

© 2019, IWOfurn Service GmbH

Segments

Index	No.	Tag	St	MaxOcc	Level	Description
0430		**SG8**	O	10	1	**Payment term / Discount date**
		Message header				
0450	39	**DTM**	R	1	2	**Discount date**

		Standard		Implementation		
Name	Description	St	Format	St	Format	Usage / Remark
DTM						
C507	Date/time/period	M		M		
2005	Date or time or period function code qualifier	M	an..3	M	an..3	**12 Terms discount due date/time**
2380	Date or time or period value	C	an..35	R	an..35	
2379	Date or time or period format code	C	an..3	R	an..3	**102 CCYYMMDD**

Remark:
Discount date

Example:
```
DTM+12:20180514:102'
```
The due date for discount is 14.05.2018

Tag = Object-Name
No. = Segment-Number in Guide
MaxOcc = Max. Occurence of Segment/Group
Index = Index-Number of Segment/Group (in Standard)

St = Status
EDIFACT: M=Mandatory, C=Conditional
Usage: R=Required, O=Optional, D=Dependent, A=Advised, N=Not used

© 2019, IWOfurn Service GmbH

Segments

Index	No.	Tag	St	MaxOcc	Level	Description
0430		**SG8**	O	10	1	**Payment term / Discount date**
		Message header				
0460	40	**PCD**	R	1	2	**Discount percentage**

		Standard		Implementation		
Name	Description	St	Format	St	Format	Usage / Remark
PCD						
C501	Percentage details	M		M		
5245	Percentage type code qualifier	M	an..3	M	an..3	**12 Discount**
5482	Percentage	C	n..10	R	n..10	Discount rate (in percent)

Remark:
Discount percentage

Example:
```
PCD+12:9'
```
A discount of 9% will be given.

Tag = Object-Name
No. = Segment-Number in Guide
MaxOcc = Max. Occurence of Segment/Group
Index = Index-Number of Segment/Group (in Standard)

St = Status
EDIFACT: M=Mandatory, C=Conditional
Usage: R=Required, O=Optional, D=Dependent, A=Advised, N=Not used

© 2019, IWOfurn Service GmbH

Segments

Index	No.	Tag	St	MaxOcc	Level	Description
0430		**SG8**	O	10	1	**Payment term / Discount date**
		Message header				
0470	41	**MOA**	R	1	2	**Monetary amount**

		Standard		Implementation		
Name	Description	St	Format	St	Format	Usage / Remark
MOA						
C516	Monetary amount	M		M		
5025	Monetary amount type code qualifier	M	an..3	M	an..3	**8 Allowance or charge amount**
5004	Monetary amount	C	n..35	R	n..35	**Discount amount**
6345	Currency identification code	C	an..3	R	an..3	**EUR Euro**

Remark:
Discount amount

Example:
`MOA+8:12.57:EUR'`
The discount amount is 12,57 EUR

Tag = Object-Name
No. = Segment-Number in Guide
MaxOcc = Max. Occurence of Segment/Group
Index = Index-Number of Segment/Group (in Standard)

St = Status
EDIFACT: M=Mandatory, C=Conditional
Usage: R=Required, O=Optional, D=Dependent, A=Advised, N=Not used

© 2019, IWOfurn Service GmbH

Segments

Index	No.	Tag	St	MaxOcc	Level	Description
0740		**SG16**	O	9999	1	**Allowances and surcharges**
		Message header				
0750	42	**ALC**	M	1	1	**Allowance or charge**

		Standard		Implementation		
Name	Description	St	Format	St	Format	Usage / Remark
ALC						
5463	Allowance or charge code qualifier	M	an..3	M	an..3	**A Allowance** **C Charge**
C552	Allowance/charge information	C		C		
1230	Allowance or charge identifier	C	an..35	C	an..35	**Group type value**
5189	Allowance or charge identification code	C	an..3	C	an..3	**Group type code** **CG Material group** **GU Exchange group** **BK Item type**
4471	Settlement means code	C	an..3	N		Not used
1227	Calculation sequence code	C	an..3	R	an..3	Order in which discounts are applied to the amount. **1 First step of calculation** **2 Second step of calculation** **3 Third step of calculation** **4 Fourth step of calculation** **5 Fifth step of calculation** **6 Sixth step of calculation**
C214	Special services identification	C		C		
7161	Special service description code	C	an..3	R	an..3	Type of allowance or surcharge coded **DI Discount** **IN Insurance** **FC Freight charge** **PC Packing** **MC Material surcharge (special materials)** **CAI Cutting charge** For group conditions: **GC Group condition** The allowance/surcharge refers to certain group of the items. Field C552.5189 and C552.1230 must also be specified when using this code
1131	Code list identification code	C	an..17	N		Not used
3055	Code list responsible agency code	C	an..3	R	an..3	**9 GS1**
7160	Special service description	C	an..35	C	an..35	Description of the allowance or surcharge

Remark:
Description of the allowance or surcharge:
e.g. promotional discount, freight charges, packaging charges etc.
A separate segment group 16 must be created for each invoiced document condition.
Document conditions in the header are independent of those in the item part, i.e. all conditions always apply
(Conditions in the item part do not overwrite the conditions in the header).
It is mandatory to specify the amount of allowance or surcharge (MOA) to avoid rounding differences.

The specification of allowances/surcharges must be made according to the calculation sequence.
Insofar as surcharges/allowances refer to a specific base amount (e.g. percentage deductions or partial amounts)
this (base amount) must be explicitly specified as the calculation basis (ALC+N) for the following calculation.

Subtotals resulting from the calculation are not transferred.

Tag = Object-Name
No. = Segment-Number in Guide
MaxOcc = Max. Occurence of Segment/Group
Index = Index-Number of Segment/Group (in Standard)

St = Status
EDIFACT: M=Mandatory, C=Conditional
Usage: R=Required, O=Optional, D=Dependent, A=Advised, N=Not used

© 2019, IWOfurn Service GmbH

Segments

For each surcharge/allowance, the amount (MOA+8) and the costing level must be explicitly specified.
If a percentage surcharge/allowance is involved, it is also mandatory to specify the base amount (MOA+25).

If a calculation base (ALC+N) is specified, the base amount (MOA+25) must be specified.
The same base amount must also be specified in the following allowance/surcharge (ALC+A or ALC+C).
The indication of a calculation basis can also be made without subsequent surcharges/allowances for information purposes.
Surcharges/discounts that refer to a certain group of items (merchandise group discounts, additional price groups, exchange groups,...) can be shown in field C214.7161 as group condition (code: GC). When using this code, information about the group type (field C552.5189, e.g. CG = merchandise group) and the group value (field C552.1230) must also be provided.

The individual items to which the discount refers can be marked with the corresponding PIA segment. (Group type: PIA.C212.7143, group value: PIA.C212.7140):
Example: PIA+5+WG23:CG:91' (article of product group WG23)

Example:

```
ALC+A+:1++1+DI:::Frühlingsrabatt.'

ALC+A+WG23:CG++1+GC::9:Warengruppenrabatt auf WG23 (10%)'
PCD+3:10'
MOA+25:200:EUR'
MOA+8:20:EUR'
```

A discount of 10% on the base amount 200.00 EUR (=20.00 EUR) is granted for the product group WG23.

```
ALC+N+WG1:CG+++GC::9:Summe WG1'
MOA+25:2619.2'
ALC+A+WG1:CG++1+GC::9:Rabat W508'
MOA+8:955'
MOA+25:2619.2'
ALC+A+WG1:CG++2+GC::9:Sofortrabatt'
PCD+3:26'
MOA+8:432.69'
MOA+25:1664.2'
```

Total WG1 : 2.619,20 EUR
- Discount W508 : 955,00 EUR (Calculation level 1)
- Immediate discount (25%) : 432,69 EUR (Calculation level 2)
= Subtotal : 1.231,51 EUR (is not specified)

```
ALC+N+WG2:CG+++GC::9:Summe WG2'
MOA+25:34'
```

Sum WG2 : 34,00 EUR
(Informative without subsequent discounts or surcharges).

```
LIN+10'
PIA+5+WG23:CG:91'
```

Article position 10 is marked as article of product group WG23

© 2019, IWOfurn Service GmbH

Segments

Index	No.	Tag	St	MaxOcc	Level	Description
0740		**SG16**	O	9999	1	**Allowances and surcharges**
		Message header				
0840		**SG19**	C	1	2	**Percentage value**
0850	43	**PCD**	M	1	2	**Percentage**

		Standard		Implementation		
Name	Description	St	Format	St	Format	Usage / Remark
PCD						
C501	Percentage details	M		M		
5245	Percentage type code qualifier	M	an..3	M	an..3	**3 Allowance or charge**
5482	Percentage	C	n..10	R	n..10	Percentage of allowance or surcharge

Remark:
Percentage of surcharge or discount.
If a value discount is specified, a percentage discount may not be specified.

Example:
```
PCD+3:5'
```
The surcharge or discount is 5%

Tag = Object-Name
No. = Segment-Number in Guide
MaxOcc = Max. Occurence of Segment/Group
Index = Index-Number of Segment/Group (in Standard)

St = Status
EDIFACT: M=Mandatory, C=Conditional
Usage: R=Required, O=Optional, D=Dependent, A=Advised, N=Not used

© 2019, IWOfurn Service GmbH

Segments

Index	No.	Tag	St	MaxOcc	Level	Description
0740		**SG16**	O	9999	1	**Allowances and surcharges**
		Message header				
0870		**SG20**	R	1	2	**Amount of money**
0880	44	**MOA**	M	1	2	**Monetary amount**

		Standard		Implementation		
Name	Description	St	Format	St	Format	Usage / Remark
MOA						
C516	Monetary amount	M		M		
5025	Monetary amount type code qualifier	M	an..3	M	an..3	**8 Allowance or charge amount** **25 Charge/allowance basis**
5004	Monetary amount	C	n..35	R	n..35	**Amount** Amount of the surcharge or discount
6345	Currency identification code	C	an..3	R	an..3	**EUR Euro**

Remark:
Amount of the surcharge or discount. e.g. merchandise group discount
When specifying a value discount (e.g. 100 EUR) of an exchange group, the value of the exchange group can be specified as the base amount (MOA+25)

Example:
`MOA+8:10.22:EUR'`
The surcharge or discount amount is 10.22 EUR

Tag = Object-Name
No. = Segment-Number in Guide
MaxOcc = Max. Occurence of Segment/Group
Index = Index-Number of Segment/Group (in Standard)

St = Status
EDIFACT: M=Mandatory, C=Conditional
Usage: R=Required, O=Optional, D=Dependent, A=Advised, N=Not used

© 2019, IWOfurn Service GmbH

Segments

Index	No.	Tag	St	MaxOcc	Level	Description
1090		**SG26**	C	9999999	1	**Item position**
		1. Invoiced unit (basic article, assortment, container, set ...)				
1100	45	**LIN**	M	1	1	**Item position**

		Standard		Implementation		
Name	Description	St	Format	St	Format	Usage / Remark
LIN						
1082	Line item identifier	C	an..6	R	an..6	
1229	Action request/notification description code	C	an..3	N		Not used
C212	Item number identification	C		A		
7140	Item identifier	C	an..35	R	an..35	GTIN of the article
7143	Item type identification code	C	an..3	R	an..3	**SRV GS1 Global Trade Item Number**

Remark:
Contains the item number and the GTIN of the item.
Each item line can have sub-items to represent different item types.
Each sub-item is a separate item that refers to the corresponding main item.

Sub-items are used, for example, to represent variant items (configurable items), set items (a collection of like or unlike items), displays (a collection of like items), or containers (a collection of like items).

The following segments apply as examples for all types of article items (with the exception of sub-items for variant articles).

Example:
```
LIN+1++4312345678910:SRV'
```
The item position 1 has the GTIN 4312345678910

Tag = Object-Name
No. = Segment-Number in Guide
MaxOcc = Max. Occurence of Segment/Group
Index = Index-Number of Segment/Group (in Standard)

St = Status
EDIFACT: M=Mandatory, C=Conditional
Usage: R=Required, O=Optional, D=Dependent, A=Advised, N=Not used

© 2019, IWOfurn Service GmbH

Segments

Index	No.	Tag	St	MaxOcc	Level	Description
1090		**SG26**	C	9999999	1	**Item position**
		1. Invoiced unit (basic article, assortment, container, set ...)				
1110	46	**PIA**	R	1	2	**GTIN**

		Standard		Implementation		
Name	Description	St	Format	St	Format	Usage / Remark
PIA						
4347	Product identifier code qualifier	M	an..3	M	an..3	**5 Product identification**
C212	Item number identification	M		M		
7140	Item identifier	C	an..35	R	an..35	**GTIN** EAN number of the article T_NEW_CATALOG/SERIES/PRODUCT_GROUPS/ PRODUCT_GROUP/ITEMS/ITEM/EAN_NUMBER
7143	Item type identification code	C	an..3	R	an..3	**SRV GS1 Global Trade Item Number**
1131	Code list identification code	C	an..17	N		Not used
3055	Code list responsible agency code	C	an..3	C	an..3	**91 Assigned by supplier or supplier's agent**

Remark:
Here you can enter the GTIN of the article (if available).
For all articles, in addition to the GTIN number transmitted in the LIN segment, the following is mandatory Order type.

For non-order relevant articles of the supplier the field C212,7143 has to be filled with the value "SA-". As a rule, all articles in an order are also relevant for ordering, exceptions are e.g. articles which are already available at the end customer, therefore are not ordered, but are transmitted for the correct generation of the length-dependent articles.
3rd party articles (see above) are by definition always not relevant for ordering, regardless of the value of field C212.7143.

Example:
```
PIA+5+4312345678910:SRV::91'
```
The GTIN of the item is 4312345678910

Tag = Object-Name
No. = Segment-Number in Guide
MaxOcc = Max. Occurence of Segment/Group
Index = Index-Number of Segment/Group (in Standard)

St = Status
EDIFACT: M=Mandatory, C=Conditional
Usage: R=Required, O=Optional, D=Dependent, A=Advised, N=Not used

© 2019, IWOfurn Service GmbH

Segments

Index	No.	Tag	St	MaxOcc	Level	Description
1090		**SG26**	C	9999999	1	**Item position**
		1. Invoiced unit (basic article, assortment, container, set ...)				
1110	47	**PIA**	R	2	2	**Manufacturer / Series**

		Standard		Implementation		
Name	Description	St	Format	St	Format	Usage / Remark
PIA						
4347	Product identifier code qualifier	M	an..3	M	an..3	**5 Product identification**
C212	Item number identification	M		M		
7140	Item identifier	C	an..35	R	an..35	Additional item identification
7143	Item type identification code	C	an..3	R	an..3	**36 IDM manufacturer ID of the supplier** T_NEW_CATALOG/CATALOG/ CATALOG_IDENTIFICATION/MANUFACTURER_ID **18 Serial number** T_NEW_CATALOG/SERIES/SERIES_NO
1131	Code list identification code	C	an..17	N		Not used
3055	Code list responsible agency code	C	an..3	C	an..3	**91 Assigned by supplier or supplier's agent**

Remark:
Contains manufacturer and series information.

If the article carries a deviating series from the standard head, this deviation must be indicated for the clear description of the article.
of the article are transferred with.
If the article is a 3rd party article, i.e. an article from a different supplier that is not available from this supplier
is ordered, but is important for correct processing (e.g. built-in stove), it must be specified to which
Supplier and to which series the article is assigned.

Example:
```
PIA+5+230:36::91'
```
The IDM manufacturer ID is 230

Tag = Object-Name
No. = Segment-Number in Guide
MaxOcc = Max. Occurence of Segment/Group
Index = Index-Number of Segment/Group (in Standard)

St = Status
EDIFACT: M=Mandatory, C=Conditional
Usage: R=Required, O=Optional, D=Dependent, A=Advised, N=Not used

© 2019, IWOfurn Service GmbH

Segments

Index	No.	Tag	St	MaxOcc	Level	Description
1090		**SG26**	C	9999999	1	**Item position**
		1. Invoiced unit (basic article, assortment, container, set ...)				
1110	48	**PIA**	D	1	2	**EDP number**

		Standard		Implementation		
Name	Description	St	Format	St	Format	Usage / Remark
PIA						
4347	Product identifier code qualifier	M	an..3	M	an..3	**5 Product identification**
C212	Item number identification	M		M		
7140	Item identifier	C	an..35	R	an..35	**EDP number** T_NEW_CATALOG/SERIES/PRODUCT_GROUPS/ PRODUCT_GROUP/ITEMS/ITEM/EDP_NUMBER
7143	Item type identification code	C	an..3	R	an..3	**MF EDP number of the manufacturer**
1131	Code list identification code	C	an..17	N		Not used
3055	Code list responsible agency code	C	an..3	C	an..3	**91 Assigned by supplier or supplier's agent**

Remark:
If an EDP number has been assigned to the article in the manufacturer's IDM data, it can be entered here.

Example:
```
PIA+5+182346278:MF::91'
```
The manufacturer EDV number of the item is 182346278

Tag = Object-Name
No. = Segment-Number in Guide
MaxOcc = Max. Occurence of Segment/Group
Index = Index-Number of Segment/Group (in Standard)

St = Status
EDIFACT: M=Mandatory, C=Conditional
Usage: R=Required, O=Optional, D=Dependent, A=Advised, N=Not used

© 2019, IWOfurn Service GmbH

Segments

Index	No.	Tag	St	MaxOcc	Level	Description
1090		**SG26**	C	9999999	1	**Item position**
		1. Invoiced unit (basic article, assortment, container, set ...)				
1110	49	**PIA**	D	1	2	**Manufacturing type**

		Standard		Implementation		
Name	Description	St	Format	St	Format	Usage / Remark
PIA						
4347	Product identifier code qualifier	M	an..3	M	an..3	**5 Product identification**
C212	Item number identification	M		M		
7140	Item identifier	C	an..35	R	an..35	**Manufacturing type**
7143	Item type identification code	C	an..3	R	an..3	**VP Manufacturing type**
1131	Code list identification code	C	an..17	N		Not used
3055	Code list responsible agency code	C	an..3	C	an..3	**91 Assigned by supplier or supplier's agent**

Remark:
The manufacturing type of the article can be specified here.

Example:
```
PIA+5+FT3467:VP::91'
```
The manufacturing type of the item is FT3467

Tag = Object-Name
No. = Segment-Number in Guide
MaxOcc = Max. Occurence of Segment/Group
Index = Index-Number of Segment/Group (in Standard)

St = Status
EDIFACT: M=Mandatory, C=Conditional
Usage: R=Required, O=Optional, D=Dependent, A=Advised, N=Not used

© 2019, IWOfurn Service GmbH

Segments

Index	No.	Tag	St	MaxOcc	Level	Description
1090		**SG26**	C	9999999	1	**Item position**
		1. Invoiced unit (basic article, assortment, container, set ...)				
1110	50	**PIA**	D	1	2	**Exchange group**

		Standard		Implementation		
Name	Description	St	Format	St	Format	Usage / Remark
PIA						
4347	Product identifier code qualifier	M	an..3	M	an..3	**5 Product identification**
C212	Item number identification	M		M		
7140	Item identifier	C	an..35	R	an..35	**Manufacturing type**
7143	Item type identification code	C	an..3	R	an..3	**GU Exchange group ID**
1131	Code list identification code	C	an..17	N		Not used
3055	Code list responsible agency code	C	an..3	C	an..3	**91 Assigned by supplier or supplier's agent**

Remark:
The exchange group of the article can be specified here.

Example:
```
PIA+5+TG2:GU::91'
```
The exchange group of the item is TG2

Tag = Object-Name
No. = Segment-Number in Guide
MaxOcc = Max. Occurence of Segment/Group
Index = Index-Number of Segment/Group (in Standard)

St = Status
EDIFACT: M=Mandatory, C=Conditional
Usage: R=Required, O=Optional, D=Dependent, A=Advised, N=Not used

© 2019, IWOfurn Service GmbH

Segments

Index	No.	Tag	St	MaxOcc	Level	Description
1090		**SG26**	C	9999999	1	**Item position**
		1. Invoiced unit (basic article, assortment, container, set ...)				
1110	51	**PIA**	D	1	2	**Product group**

		Standard		Implementation		
Name	Description	St	Format	St	Format	Usage / Remark
PIA						
4347	Product identifier code qualifier	M	an..3	M	an..3	**5 Product identification**
C212	Item number identification	M		M		
7140	Item identifier	C	an..35	R	an..35	**Product group**
7143	Item type identification code	C	an..3	R	an..3	**CG Product group**
1131	Code list identification code	C	an..17	N		Not used
3055	Code list responsible agency code	C	an..3	C	an..3	**91 Assigned by supplier or supplier's agent**

Remark:
The article's product group can be specified here.

Example:
```
PIA+5+WG23:CG::91'
```
The product group of the article is WG23

Tag = Object-Name
No. = Segment-Number in Guide
MaxOcc = Max. Occurence of Segment/Group
Index = Index-Number of Segment/Group (in Standard)

St = Status
EDIFACT: M=Mandatory, C=Conditional
Usage: R=Required, O=Optional, D=Dependent, A=Advised, N=Not used

© 2019, IWOfurn Service GmbH

Segments

Index	No.	Tag	St	MaxOcc	Level	Description
1090		**SG26**	C	9999999	1	**Item position**
		1. Invoiced unit (basic article, assortment, container, set ...)				
1110	52	**PIA**	O	4	2	**Item number / Customs tariff numbers**

		Standard		Implementation		
Name	Description	St	Format	St	Format	Usage / Remark
PIA						
4347	Product identifier code qualifier	M	an..3	M	an..3	**1 Additional identification**
C212	Item number identification	M		M		
7140	Item identifier	C	an..35	R	an..35	Additional item identification
7143	Item type identification code	C	an..3	R	an..3	**SA Supplier's article number** **IN Buyer's item number** **NB Batch number** **HS Harmonised system**

Remark:
Contains e.g. the manufacturer article number or the dealer article number.

Example:
`PIA+1+12345:SA'`
The manufacturer article number is 12345

`PIA+1+94016100:HS'`
The customs tariff number of the item is 94016100

Tag = Object-Name
No. = Segment-Number in Guide
MaxOcc = Max. Occurence of Segment/Group
Index = Index-Number of Segment/Group (in Standard)

St = Status
EDIFACT: M=Mandatory, C=Conditional
Usage: R=Required, O=Optional, D=Dependent, A=Advised, N=Not used

© 2019, IWOfurn Service GmbH

Segments

Index	No.	Tag	St	MaxOcc	Level	Description
1090		**SG26**	C	9999999	1	**Item position**
		1. Invoiced unit (basic article, assortment, container, set ...)				
1110	53	**PIA**	D	1	2	**Stop / Construction type / Cisible sides**

		Standard		Implementation		
Name	Description	St	Format	St	Format	Usage / Remark
PIA						
4347	Product identifier code qualifier	M	an..3	M	an..3	**1 Additional identification**
C212	Item number identification	M		M		
7140	Item identifier	C	an..35	C	an..35	**Stop, construction type or visible side** permissible values: for stop: L/R/M for construction type: L/R for visible side: L/R/O/U/H (several values possible)
7143	Item type identification code	C	an..3	R	an..3	**6 Stop** **67 Construction type** **68 Visible Side(s)**
1131	Code list identification code	C	an..17	N		Not used
3055	Code list responsible agency code	C	an..3	C	an..3	**91 Assigned by supplier or supplier's agent**

Remark:
Additional information can be specified here for the following items:
For stop-dependent articles, stop information can be entered here.
The following values are allowed here: L,R,M (Left, Right, Center)
In the case of articles dependent on the construction type, details of the construction type can be given here.
The following values are allowed here: L,R (Left, Right)
For articles with visible sides, details of the visible sides ((L)eft/(R)ight/(O)Top/(U)Bottom/(H)Back) now follow.
analogous to the PIA segments of the stop and construction type.
The specification for C212,7140 can contain several specifications, e.g. LR, LRU, LU, ... The sequence is any. The article visible side then comes as a separate PIA segment and as a sub-item to the cabinet.
This means that a new LIN segment must be provided for each visible side of a cabinet.

Example:
```
PIA+1+LRU:68::91'
```
The viewing sides of the item are: Left, Right and Bottom

Tag = Object-Name
No. = Segment-Number in Guide
MaxOcc = Max. Occurence of Segment/Group
Index = Index-Number of Segment/Group (in Standard)

St = Status
EDIFACT: M=Mandatory, C=Conditional
Usage: R=Required, O=Optional, D=Dependent, A=Advised, N=Not used

© 2019, IWOfurn Service GmbH

Segments

Index	No.	Tag	St	MaxOcc	Level	Description
1090		**SG26**	C	9999999	1	**Item position**
		1. Invoiced unit (basic article, assortment, container, set ...)				
1130	54	**IMD**	O	1	2	**Article description**

		Standard		Implementation		
Name	Description	St	Format	St	Format	Usage / Remark
IMD						
7077	Description format code	C	an..3	R	an..3	**A Free-form long description**
C272	Item characteristic	C		N		
7081	Item characteristic code	C	an..3	N		Not used
C273	Item description	C		R		
7009	Item description code	C	an..17	N		Not used
1131	Code list identification code	C	an..17	N		Not used
3055	Code list responsible agency code	C	an..3	N		Not used
7008	Item description	C	an..256	R	an..256	Item name Supplier / Manufacturer
7008	Item description	C	an..256	O	an..256	Item name customer

Remark:
Contains the item name

Example:
```
IMD+A++:::Funktions Sofa Holle:Holle Schlafsofa'
```
The supplier/invoicing party's item name is "Funktions-Sofa Holle", and the item's customer name is "Holle Schlafsofa".

Tag = Object-Name
No. = Segment-Number in Guide
MaxOcc = Max. Occurence of Segment/Group
Index = Index-Number of Segment/Group (in Standard)

St = Status
EDIFACT: M=Mandatory, C=Conditional
Usage: R=Required, O=Optional, D=Dependent, A=Advised, N=Not used

© 2019, IWOfurn Service GmbH

Segments

Index	No.	Tag	St	MaxOcc	Level	Description
1090		**SG26**	C	9999999	1	**Item position**
		1. Invoiced unit (basic article, assortment, container, set ...)				
1130	55	**IMD**	D	5	2	**Type of item (flag)**

		Standard		Implementation		
Name	Description	St	Format	St	Format	Usage / Remark
IMD						
7077	Description format code	C	an..3	C	an..3	**C Code (from industry code list)**
C272	Item characteristic	C		N		
7081	Item characteristic code	C	an..3	N		Not used
C273	Item description	C		C		
7009	Item description code	C	an..17	C	an..17	**BA Base article (GS1 Permanent Code)** A basic article for ordering an order-dependent produced article (variant article) . Base items must always be supplemented with a set of options. **TU Traded unit (GS1 Permanent Code)** The package size of one or more products agreed upon between trading partners as the size that will be ordered, delivered and invoiced. **SG Standard group of products (mixed assortment) (GS1 Permanent Code)** A standard package containing various products that can be ordered, delivered and charged. **SPK Setpack (GS1 Permanent Code)** **PR1 Bonus Pack (GS1 Permanent Code)** **NO Not an ordering unit (GS1 Permanent Code)** The package size of one or more products that cannot be ordered. **NDU Not a despatch unit (GS1 Permanent Code)** The current basic article or packaging is not a regular logistic delivery unit, i.e. it is usually delivered only together with others for later repackaging and not as an individual logistic unit. **FMD 3rd party article** **SER Service (GS1 Permanent Code)** Item type

Remark:
Item type:
Whether it is a sales unit or a 3rd party article, for example. Further information can be found in the code list.

Example:
`IMD+C++BA'`
This is a base item (a configurable item that is further specified via options).

`IMD+C++TU'`
This item is a commercial unit.

Tag = Object-Name
No. = Segment-Number in Guide
MaxOcc = Max. Occurence of Segment/Group
Index = Index-Number of Segment/Group (in Standard)

St = Status
EDIFACT: M=Mandatory, C=Conditional
Usage: R=Required, O=Optional, D=Dependent, A=Advised, N=Not used

© 2019, IWOfurn Service GmbH

Segments

Index	No.	Tag	St	MaxOcc	Level	Description
1090		**SG26**	C	9999999	1	**Item position**
		1. Invoiced unit (basic article, assortment, container, set ...)				
1130	56	**IMD**	D	1	2	**Invoicing unit (flag)**

		Standard		Implementation		
Name	Description	St	Format	St	Format	Usage / Remark
IMD						
7077	Description format code	C	an..3	C	an..3	**C Code (from industry code list)**
C272	Item characteristic	C		N		
7081	Item characteristic code	C	an..3	N		Not used
C273	Item description	C		C		
7009	Item description code	C	an..17	C	an..17	**IN Invoicing unit (GS1 Permanent Code)**

Remark:
Segment used to identify an item as an invoicing unit.
A billing unit is the package size of one or more products that is billed as a unit to the buyer.

Example:
```
IMD+C++IN'
```
This is an invoicing unit.

Tag = Object-Name
No. = Segment-Number in Guide
MaxOcc = Max. Occurence of Segment/Group
Index = Index-Number of Segment/Group (in Standard)

St = Status
EDIFACT: M=Mandatory, C=Conditional
Usage: R=Required, O=Optional, D=Dependent, A=Advised, N=Not used

© 2019, IWOfurn Service GmbH

Segments

Index	No.	Tag	St	MaxOcc	Level	Description
1090		**SG26**	C	9999999	1	**Item position**
		1. Invoiced unit (basic article, assortment, container, set ...)				
1130	57	**IMD**	O	99	2	**Quality feature / certificate**

		Standard		Implementation		
Name	Description	St	Format	St	Format	Usage / Remark
IMD						
7077	Description format code	C	an..3	C	an..3	**B Code and text**
C272	Item characteristic	C		N		
7081	Item characteristic code	C	an..3	N		Not used
C273	Item description	C		C		
7009	Item description code	C	an..17	C	an..17	**PRO Programme (GS1 Permanent Code)**
1131	Code list identification code	C	an..17	N		Not used
3055	Code list responsible agency code	C	an..3	C	an..3	**91 Assigned by supplier or supplier's agent** **92 Assigned by buyer or buyer's agent**
7008	Item description	C	an..256	C	an..256	**Name of the certificate / quality feature**

Remark:
This segment is used to specify product-specific quality characteristics (such as certifications) of the product.

Example:
```
IMD+F++13::91:PEFC'
```
The article has the quality flag "PEFC".

Tag = Object-Name
No. = Segment-Number in Guide
MaxOcc = Max. Occurence of Segment/Group
Index = Index-Number of Segment/Group (in Standard)

St = Status
EDIFACT: M=Mandatory, C=Conditional
Usage: R=Required, O=Optional, D=Dependent, A=Advised, N=Not used

© 2019, IWOfurn Service GmbH

Segments

Index	No.	Tag	St	MaxOcc	Level	Description
1090		**SG26**	C	9999999	1	**Item position**
		1. Invoiced unit (basic article, assortment, container, set ...)				
1140	58	**MEA**	O	5	2	**Measurements**

		Standard		Implementation		
Name	Description	St	Format	St	Format	Usage / Remark
MEA						
6311	Measurement purpose code qualifier	M	an..3	M	an..3	**AAE Weight or volume in general** **PD Physical dimensions (product ordered)** **ABL Inner dimension** **ABK Outside dimension** **Y2E Maximum dimensions using a functionality (GS1 Temporary Code)** Maximum dimension e.g. by extension **Y3E Minimum dimensions using a functionality (GS1 Temporary Code)** Minimum dimension e.g. folding chair folded **Y4E Mattress dimensions (GS1 Temporary Code)** **Y5E Seat dimensions (GS1 Temporary Code)**
C502	Measurement details	C		R		
6313	Measured attribute code	C	an..3	R	an..3	**AAA Unit net weight** **AAB Unit gross weight** **AAF Net weight of one unit without packaging** **ABJ Volume** **DP Depth** **HT Height dimension** **LN Length dimension** **WD Width dimension** **DI Diameter**
C174	Value/range	C		R		
6411	Measurement unit code	M	an..3	R	an..3	**MMT millimetre** **CMT centimetre** **MTR metre** **KGM kilogram** **MTQ cubic metre**
6314	Measurement value	C	an..18	R	an..18	Measure to the article

Remark:
Dimensions
For example, whether it is a weight and whether it is a net or gross weight. Also you can specify the length, width and height of the item.

Example:
`MEA+AAE+WD+MMT:1200'`
The width of the article is 1200mm

Tag = Object-Name
No. = Segment-Number in Guide
MaxOcc = Max. Occurence of Segment/Group
Index = Index-Number of Segment/Group (in Standard)

St = Status
EDIFACT: M=Mandatory, C=Conditional
Usage: R=Required, O=Optional, D=Dependent, A=Advised, N=Not used

© 2019, IWOfurn Service GmbH

Segments

Index	No.	Tag	St	MaxOcc	Level	Description
1090		**SG26**	C	9999999	1	**Item position**
		1. Invoiced unit (basic article, assortment, container, set ...)				
1150	59	**QTY**	R	5	2	**Calculated quantity**

		Standard		Implementation		
Name	Description	St	Format	St	Format	Usage / Remark
QTY						
C186	Quantity details	M		M		
6063	Quantity type code qualifier	M	an..3	M	an..3	**47 Invoiced quantity**
6060	Quantity	M	an..35	M	an..35	Invoice quantity
6411	Measurement unit code	C	an..3	O	an..3	**PCE Piece (GS1 Temporary Code)** **MTR metre** **KGM kilogram**

Remark:
The amount that the sender charges the receiver.

Example:
`QTY+47:2:PCE'`
The calculated quantity is 2 pieces.

© 2019, IWOfurn Service GmbH

Segments

Index	No.	Tag	St	MaxOcc	Level	Description
1090		**SG26**	C	9999999	1	**Item position**
		1. Invoiced unit (basic article, assortment, container, set ...)				
1150	60	**QTY**	O	3	2	**Other quantity data**

		Standard		Implementation		
Name	Description	St	Format	St	Format	Usage / Remark
QTY						
C186	Quantity details	M		M		
6063	Quantity type code qualifier	M	an..3	M	an..3	**12 Despatch quantity** **21 Ordered quantity** **192 Free goods quantity**
6060	Quantity	M	an..35	M	an..35	Additional quantity specification
6411	Measurement unit code	C	an..3	O	an..3	**PCE Piece (GS1 Temporary Code)** **MTR metre** **KGM kilogram**

Remark:
The quantity that the sender confirms to the receiver.

Example:
`QTY+12:10:PCE'`
The delivered quantity is 3 pieces.

`QTY+21:3:PCE'`
3 pieces were ordered.

`QTY+192:1:PCE'`
The quantity not charged is 1 piece.

Tag = Object-Name
No. = Segment-Number in Guide
MaxOcc = Max. Occurence of Segment/Group
Index = Index-Number of Segment/Group (in Standard)

St = Status
EDIFACT: M=Mandatory, C=Conditional
Usage: R=Required, O=Optional, D=Dependent, A=Advised, N=Not used

© 2019, IWOfurn Service GmbH

Segments

Index	No.	Tag	St	MaxOcc	Level	Description
1090		**SG26**	C	9999999	1	**Item position**
		1. Invoiced unit (basic article, assortment, container, set ...)				
1180	61	**DTM**	O	5	2	**Dates**

		Standard		Implementation		
Name	Description	St	Format	St	Format	Usage / Remark
DTM						
C507	Date/time/period	M		O		
2005	Date or time or period function code qualifier	M	an..3	M	an..3	**2 Delivery date/time, requested** **79 Shipment date/time, promised for**
2380	Date or time or period value	C	an..35	R	an..35	
2379	Date or time or period format code	C	an..3	R	an..3	**102 CCYYMMDD** **616 CCYYWW**

Remark:
This segment is used to specify item-related dates, unless they are already specified in the document header or differ from them.

Example:
```
DTM+2:20180514:102'
```
The required delivery date for this item is 14.05.2018.

Tag = Object-Name
No. = Segment-Number in Guide
MaxOcc = Max. Occurence of Segment/Group
Index = Index-Number of Segment/Group (in Standard)

St = Status
EDIFACT: M=Mandatory, C=Conditional
Usage: R=Required, O=Optional, D=Dependent, A=Advised, N=Not used

© 2019, IWOfurn Service GmbH

Segments

Index	No.	Tag	St	MaxOcc	Level	Description
1090		**SG26**	C	9999999	1	**Item position**
		1. Invoiced unit (basic article, assortment, container, set ...)				
1230	62	**FTX**	O	99	2	**Free text**

		Standard		Implementation		
Name	Description	St	Format	St	Format	Usage / Remark
FTX						
4451	Text subject code qualifier	M	an..3	R	an..3	**ZZZ Mutually defined**
4453	Free text function code	C	an..3	R	an..3	**1 Text for subsequent use**
C107	Text reference	C		O		
4441	Free text value code	M	an..17	R	an..17	
C108	Text literal	C		R		
4440	Free text value	M	an..512	M	an..512	Freetext
4440	Free text value	C	an..512	O	an..512	
4440	Free text value	C	an..512	O	an..512	
4440	Free text value	C	an..512	O	an..512	
4440	Free text value	C	an..512	O	an..512	

Remark:
Position freetext:
Additional information that may pertain to the item.

Example:
```
FTX+ZZZ+1++Freitext 1:Freitext 2:Freitext 3'
```
Freetext information about the article

Tag = Object-Name
No. = Segment-Number in Guide
MaxOcc = Max. Occurence of Segment/Group
Index = Index-Number of Segment/Group (in Standard)

St = Status
EDIFACT: M=Mandatory, C=Conditional
Usage: R=Required, O=Optional, D=Dependent, A=Advised, N=Not used

© 2019, IWOfurn Service GmbH

Segments

Index	No.	Tag	St	MaxOcc	Level	Description
1090		**SG26**	C	9999999	1	**Item position**
		1. Invoiced unit (basic article, assortment, container, set ...)				
1250		**SG27**	D	1	2	**Position amount**
1260	63	**MOA**	M	1	2	**Position amount**

		Standard		Implementation		
Name	Description	St	Format	St	Format	Usage / Remark
MOA						
C516	Monetary amount	M		M		
5025	Monetary amount type code qualifier	M	an..3	M	an..3	**203 Line item amount**
5004	Monetary amount	C	n..35	R	n..35	Position amount
6345	Currency identification code	C	an..3	O	an..3	**EUR Euro**

Remark:
Position amount:
The sum resulting from the
Gross price x quantity + - surcharges/discounts
OR
Net price x quantity
results.
Only all billable items may have a position amount (MOA+203).

It applies:
Adding up all the position amounts gives the total goods value of the invoice,
i.e. sub-items may not have item amounts that are already included in the main item,
however, it is allowed to specify item amounts in main and sub-items where it makes sense to do so
(e.g.: for sub-items represent the price markups that are not included in the main item).

Example:
```
MOA+203:1047.99:EUR'
```
The position amount is 1047.99 EUR

Tag = Object-Name
No. = Segment-Number in Guide
MaxOcc = Max. Occurence of Segment/Group
Index = Index-Number of Segment/Group (in Standard)

St = Status
EDIFACT: M=Mandatory, C=Conditional
Usage: R=Required, O=Optional, D=Dependent, A=Advised, N=Not used

© 2019, IWOfurn Service GmbH

Segments

Index	No.	Tag	St	MaxOcc	Level	Description
1090		**SG26**	C	9999999	1	**Item position**
		1. Invoiced unit (basic article, assortment, container, set ...)				
1250		**SG27**	O	1	2	**Item amount of surcharges and discounts**
1260	64	**MOA**	M	1	2	**Item amount of surcharges and discounts**

		Standard		Implementation		
Name	Description	St	Format	St	Format	Usage / Remark
MOA						
C516	Monetary amount	M		M		
5025	Monetary amount type code qualifier	M	an..3	M	an..3	**131 Total charges/allowances**
5004	Monetary amount	C	n..35	R	n..35	Sum of surcharges and discounts
6345	Currency identification code	C	an..3	O	an..3	**EUR Euro**

Remark:
This segment is used to specify the sum of all surcharges and discounts.
The amount here is either positive (for surcharges) or negative (for discounts) and can therefore have a sign.

Example:
`MOA+131:-2.55:EUR'`
This item includes a 2.55 EUR discount.

Tag = Object-Name
No. = Segment-Number in Guide
MaxOcc = Max. Occurence of Segment/Group
Index = Index-Number of Segment/Group (in Standard)

St = Status
EDIFACT: M=Mandatory, C=Conditional
Usage: R=Required, O=Optional, D=Dependent, A=Advised, N=Not used

© 2019, IWOfurn Service GmbH

Segments

Index	No.	Tag	St	MaxOcc	Level	Description
1090		**SG26**	C	9999999	1	**Item position**
		1. Invoiced unit (basic article, assortment, container, set ...)				
1250		**SG27**	O	99	2	**Other position amounts**
1260	65	**MOA**	M	1	2	**Monetary amount**

		Standard		Implementation		
Name	Description	St	Format	St	Format	Usage / Remark
MOA						
C516	Monetary amount	M		M		
5025	Monetary amount type code qualifier	M	an..3	M	an..3	**43 Declared total Customs value**
5004	Monetary amount	C	n..35	R	n..35	
6345	Currency identification code	C	an..3	O	an..3	**EUR Euro**

Remark:
Additional position amount

Example:
`MOA+43:1050:EUR'`
The total declared customs value is 1050 EUR

Tag = Object-Name
No. = Segment-Number in Guide
MaxOcc = Max. Occurence of Segment/Group
Index = Index-Number of Segment/Group (in Standard)

St = Status
EDIFACT: M=Mandatory, C=Conditional
Usage: R=Required, O=Optional, D=Dependent, A=Advised, N=Not used

© 2019, IWOfurn Service GmbH

Segments

Index	No.	Tag	St	MaxOcc	Level	Description
1090		**SG26**	C	9999999	1	**Item position**
		1. Invoiced unit (basic article, assortment, container, set ...)				
1330		**SG29**	D	1	2	**Price indication / net price**
1340	66	**PRI**	M	1	2	**Net price**

		Standard		Implementation		
Name	Description	St	Format	St	Format	Usage / Remark
PRI						
C509	Price information	C		C		
5125	Price code qualifier	M	an..3	M	an..3	**AAA Net price** The price shown is the net price including all surcharges and discounts and excluding taxes. Surcharges/discounts may be indicated for information purposes only.
5118	Price amount	C	n..15	R	n..15	Net price including surcharges and discounts
5375	Price type code	C	an..3	N		Not used
5387	Price specification code	C	an..3	N		Not used
5284	Unit price basis value	C	n..9	O	n..9	Number of trading units for which the price stands
6411	Measurement unit code	C	an..3	O	an..3	**MTK square metre** **PCE Piece (GS1 Temporary Code)** **KGM kilogram** **MTR metre**

Remark:
This segment is used to specify the item prices in a net price calculation.

ATTENTION: It is recommended not to use this type of pricing and to use gross pricing instead.
In a gross price calculation, list prices and discounts are shown so that a transparent calculation is possible.
In a net calculation, all discounts are already included. Discounts may also be indicated here, but only for information purposes.
The net price is the gross price +/- conditions based on the unit price base quantity.
Unless a base quantity is specified, the price is per unit.
It is recommended to indicate here the net unit price and to refrain from indicating a base quantity.
Only one costing method may be used in the invoice to determine the value of goods.

Example:
`PRI+AAA:230.50'`
The net price is 230.50 per piece

`PRI+AAA:1240.90:::100:KGM'`
The net price is 1240,90 per 100 Kg

Tag = Object-Name
No. = Segment-Number in Guide
MaxOcc = Max. Occurence of Segment/Group
Index = Index-Number of Segment/Group (in Standard)

St = Status
EDIFACT: M=Mandatory, C=Conditional
Usage: R=Required, O=Optional, D=Dependent, A=Advised, N=Not used

© 2019, IWOfurn Service GmbH

Segments

Index	No.	Tag	St	MaxOcc	Level	Description
1090		**SG26**	C	9999999	1	**Item position**
		1. Invoiced unit (basic article, assortment, container, set ...)				
1330		**SG29**	D	1	2	**Price / gross price**
1340	67	**PRI**	M	1	2	**Gross price**

		Standard		Implementation		
Name	Description	St	Format	St	Format	Usage / Remark
PRI						
C509	Price information	C		C		
5125	Price code qualifier	M	an..3	M	an..3	**AAB Gross price** The price shown is the gross price excluding all surcharges and discounts and excluding taxes. Surcharges and discounts must be specified to calculate the net price.
5118	Price amount	C	n..15	R	n..15	Gross price excluding surcharges and discounts
5375	Price type code	C	an..3	N		Not used
5387	Price specification code	C	an..3	N		Not used
5284	Unit price basis value	C	n..9	O	n..9	Number of trading units for which the price stands
6411	Measurement unit code	C	an..3	O	an..3	**MTK square metre** **PCE Piece (GS1 Temporary Code)** **KGM kilogram** **MTR metre**

Remark:
The gross price is the price to which surcharges/discounts and taxes are added.
It is used in the invoice if no prior agreements have been made. All imputed surcharges/discounts must be indicated.
Only one costing method may be used in the invoice to determine the value of goods.

Example:
`PRI+AAB:4.79'`
The gross price is 4.79 per piece

`PRI+AAA:1240.90:::100:KGM'`
The net price is 1240,90 per 100 Kg

Tag = Object-Name
No. = Segment-Number in Guide
MaxOcc = Max. Occurence of Segment/Group
Index = Index-Number of Segment/Group (in Standard)

St = Status
EDIFACT: M=Mandatory, C=Conditional
Usage: R=Required, O=Optional, D=Dependent, A=Advised, N=Not used

© 2019, IWOfurn Service GmbH

Segments

Index	No.	Tag	St	MaxOcc	Level	Description
1090		**SG26**	C	9999999	1	**Item position**
		1. Invoiced unit (basic article, assortment, container, set ...)				
1330		**SG29**	O	1	2	**Price / Recommended Retail Sales Price**
1340	68	**PRI**	M	1	2	**Sales price**

		Standard		Implementation		
Name	Description	St	Format	St	Format	Usage / Remark
PRI						
C509	Price information	C		R		
5125	Price code qualifier	M	an..3	M	an..3	**AAE Sales price**
5118	Price amount	C	n..15	R	n..15	Gross price excluding surcharges and discounts
5375	Price type code	C	an..3	N		Not used
5387	Price specification code	C	an..3	R	an..3	**SRP Suggested retail price**
5284	Unit price basis value	C	n..9	O	n..9	Number of trading units for which the price stands
6411	Measurement unit code	C	an..3	O	an..3	**MTK square metre** **PCE Piece (GS1 Temporary Code)** **KGM kilogram** **MTR metre**

Remark:
Recommended Retail Sales Price

Example:
`PRI+AAE:799::SRP'`
The recommended retail sales price of the item is 799.00 (tax included) per piece.

Tag = Object-Name
No. = Segment-Number in Guide
MaxOcc = Max. Occurence of Segment/Group
Index = Index-Number of Segment/Group (in Standard)

St = Status
EDIFACT: M=Mandatory, C=Conditional
Usage: R=Required, O=Optional, D=Dependent, A=Advised, N=Not used

© 2019, IWOfurn Service GmbH

Segments

Index	No.	Tag	St	MaxOcc	Level	Description
1090		**SG26**	C	9999999	1	**Item position**
		1. Invoiced unit (basic article, assortment, container, set ...)				
1390		**SG30**	O	10	2	**Reference / Order number**
1400	69	**RFF**	M	1	2	**Order number**

		Standard		Implementation		
Name	Description	St	Format	St	Format	Usage / Remark
RFF						
C506	Reference	M		M		
1153	Reference code qualifier	M	an..3	M	an..3	**ON Order number (buyer)**
1154	Reference identifier	C	an..70	R	an..70	Document number of the sales order
1156	Document line identifier	C	an..6	A	an..6	Item number of the sales order

Remark:
Reference to the customer's order number and order item (order number).

Example:
`RFF+ON:BE7732:1'`
The invoice item refers to item 1 of purchase order BE7732

Tag = Object-Name
No. = Segment-Number in Guide
MaxOcc = Max. Occurence of Segment/Group
Index = Index-Number of Segment/Group (in Standard)

St = Status
EDIFACT: M=Mandatory, C=Conditional
Usage: R=Required, O=Optional, D=Dependent, A=Advised, N=Not used

© 2019, IWOfurn Service GmbH

Segments

Index	No.	Tag	St	MaxOcc	Level	Description
1090		**SG26**	C	9999999	1	**Item position**
		1. Invoiced unit (basic article, assortment, container, set ...)				
1390		**SG30**	O	10	2	**Reference / Order number**
1410	70	**DTM**	O	1	3	**Date of order**

		Standard		Implementation		
Name	Description	St	Format	St	Format	Usage / Remark
DTM						
C507	Date/time/period	M		M		
2005	Date or time or period function code qualifier	M	an..3	M	an..3	**171 Reference date/time**
2380	Date or time or period value	C	an..35	R	an..35	Order date
2379	Date or time or period format code	C	an..3	R	an..3	**102 CCYYMMDD**

Remark:
Date of order:
Date when the order was created (DTM+137 of the order).

Example:
```
DTM+171:20180427:102'
```
The date of the reference is 24.04.2018

Tag = Object-Name
No. = Segment-Number in Guide
MaxOcc = Max. Occurence of Segment/Group
Index = Index-Number of Segment/Group (in Standard)

St = Status
EDIFACT: M=Mandatory, C=Conditional
Usage: R=Required, O=Optional, D=Dependent, A=Advised, N=Not used

© 2019, IWOfurn Service GmbH

Segments

Index	No.	Tag	St	MaxOcc	Level	Description
1090		**SG26**	C	9999999	1	**Item position**
		1. Invoiced unit (basic article, assortment, container, set ...)				
1390		**SG30**	O	2	2	**Reference / Commission**
1400	71	**RFF**	M	1	2	**Reference**

		Standard		Implementation		
Name	Description	St	Format	St	Format	Usage / Remark
RFF						
C506	Reference	M		M		
1153	Reference code qualifier	M	an..3	M	an..3	**YB4 Commission number** for kitchen: **CR Commission number** **UC Commission name**
1154	Reference identifier	C	an..70	C	an..70	Additional document reference related to current position
1156	Document line identifier	C	an..6	O	an..6	Position number of the current position in the referenced document

Remark:
Commission

Example:
`RFF+YB4:OBJ2638'`
The invoice item refers to the commission OBJ2638

`RFF+CR:K1256-3'`
The kitchen commission number is K1256-3

`RFF+UC:Mueller Lohe'`
The kitchen commission name is "Mueller Lohe".

Tag = Object-Name
No. = Segment-Number in Guide
MaxOcc = Max. Occurence of Segment/Group
Index = Index-Number of Segment/Group (in Standard)

St = Status
EDIFACT: M=Mandatory, C=Conditional
Usage: R=Required, O=Optional, D=Dependent, A=Advised, N=Not used

© 2019, IWOfurn Service GmbH

Segments

Index	No.	Tag	St	MaxOcc	Level	Description
1090		**SG26**	C	9999999	1	**Item position**
		1. Invoiced unit (basic article, assortment, container, set ...)				
1390		**SG30**	O	10	2	**Additional references**
		Further references possible by bilateral agreement.				
1400	72	**RFF**	M	1	2	**Reference**

		Standard		Implementation		
Name	Description	St	Format	St	Format	Usage / Remark
RFF						
C506	Reference	M		M		
1153	Reference code qualifier	M	an..3	M	an..3	**OP Reference to the original customer order** **AAK Despatch advice number** **LI Line item reference number** **XCG Reference to the GeoID** **XCC Reference to the ConfigID**
1154	Reference identifier	C	an..70	R	an..70	Additional document reference related to current position
1156	Document line identifier	C	an..6	O	an..6	Position number of the current position in the referenced document

Remark:
Position reference information

Example:
`RFF+OP:12314:2'`
The order item refers to item 2 of the original sales order with the number 12314

Tag = Object-Name
No. = Segment-Number in Guide
MaxOcc = Max. Occurence of Segment/Group
Index = Index-Number of Segment/Group (in Standard)

St = Status
EDIFACT: M=Mandatory, C=Conditional
Usage: R=Required, O=Optional, D=Dependent, A=Advised, N=Not used

© 2019, IWOfurn Service GmbH

Segments

Index	No.	Tag	St	MaxOcc	Level	Description
1090		**SG26**	C	9999999	1	**Item position**
		1. Invoiced unit (basic article, assortment, container, set ...)				
1390		**SG30**	O	10	2	**Additional references**
		Further references possible by bilateral agreement.				
1410	73	**DTM**	C	5	3	**Date/time/period**

		Standard		Implementation		
Name	Description	St	Format	St	Format	Usage / Remark
DTM						
C507	Date/time/period	M		M		
2005	Date or time or period function code qualifier	M	an..3	M	an..3	**171 Reference date/time**
2380	Date or time or period value	C	an..35	C	an..35	Document date of the referenced document
2379	Date or time or period format code	C	an..3	C	an..3	**102 CCYYMMDD**

Remark:

Example:

```
DTM+171:20180131:102'
```

The date of the reference is 31.01.2018

Tag = Object-Name
No. = Segment-Number in Guide
MaxOcc = Max. Occurence of Segment/Group
Index = Index-Number of Segment/Group (in Standard)

St = Status
EDIFACT: M=Mandatory, C=Conditional
Usage: R=Required, O=Optional, D=Dependent, A=Advised, N=Not used

© 2019, IWOfurn Service GmbH

Segments

Index	No.	Tag	St	MaxOcc	Level	Description
1090		**SG26**	C	9999999	1	**Item position**
		1. Invoiced unit (basic article, assortment, container, set ...)				
1420		**SG31**	O	10	2	**Number and type of packaging**
1430	74	**PAC**	M	1	2	**Number and type of packaging**

		Standard		Implementation		
Name	Description	St	Format	St	Format	Usage / Remark
PAC						
7224	Package quantity	C	n..8	R	n..8	Total number of packages of the item
C531	Packaging details	C		N		
7075	Packaging level code	C	an..3	N		Not used
C202	Package type	C		R		
7065	Package type description code	C	an..17	R	an..17	**200 Pallet ISO 0 - 1/2 EURO Pallet (GS1 Temporary Code)** **201 Pallet ISO 1 - 1/1 EURO Pallet (GS1 Temporary Code)** **PC Parcel** **CT Carton**

Remark:

Example:

```
PAC+3++201'
```

The position consists of 3 EURO pallets

Tag = Object-Name
No. = Segment-Number in Guide
MaxOcc = Max. Occurence of Segment/Group
Index = Index-Number of Segment/Group (in Standard)

St = Status
EDIFACT: M=Mandatory, C=Conditional
Usage: R=Required, O=Optional, D=Dependent, A=Advised, N=Not used

© 2019, IWOfurn Service GmbH

Segments

Index	No.	Tag	St	MaxOcc	Level	Description
1090		**SG26**	C	9999999	1	**Item position**
		1. Invoiced unit (basic article, assortment, container, set ...)				
1550		**SG34**	D	99	2	**Sales tax on position**
1560	75	**TAX**	M	1	2	**Duty/tax/fee details**

		Standard		Implementation		
Name	Description	St	Format	St	Format	Usage / Remark
TAX						
5283	Duty or tax or fee function code qualifier	M	an..3	M	an..3	**7 Tax**
C241	Duty/tax/fee type	C		R		
5153	Duty or tax or fee type name code	C	an..3	R	an..3	**VAT Value added tax**
C533	Duty/tax/fee account detail	C		N		
5289	Duty or tax or fee account code	M	an..6	N		Not used
5286	Duty or tax or fee assessment basis value	C	an..15	N		Not used
C243	Duty/tax/fee detail	C		R		
5279	Duty or tax or fee rate code	C	an..7	N		Not used
1131	Code list identification code	C	an..17	N		Not used
3055	Code list responsible agency code	C	an..3	N		Not used
5278	Duty or tax or fee rate	C	an..17	R	an..17	**Tax rate (in percent)**
5305	Duty or tax or fee category code	C	an..3	R	an..3	**S Standard rate** **E Exempt from tax**

Remark:
The applicable tax rate of the document has been specified in the document header. Any different tax rates must be specified here at item level.

Example:
`TAX+7+VAT+++:::19+S'`
The item has a VAT unit rate of 19%

`TAX+7+VAT+++:::0+E'`
The article is tax exempt

Tag = Object-Name
No. = Segment-Number in Guide
MaxOcc = Max. Occurence of Segment/Group
Index = Index-Number of Segment/Group (in Standard)

St = Status
EDIFACT: M=Mandatory, C=Conditional
Usage: R=Required, O=Optional, D=Dependent, A=Advised, N=Not used

© 2019, IWOfurn Service GmbH

Segments

Index	No.	Tag	St	MaxOcc	Level	Description
1090		**SG26**	C	9999999	1	**Item position**
		1. Invoiced unit (basic article, assortment, container, set ...)				
1720		**SG39**	O	30	2	**Surcharges and discounts on position**
1730	76	**ALC**	M	1	2	**Allowance or charge**

		Standard		Implementation		
Name	Description	St	Format	St	Format	Usage / Remark
ALC						
5463	Allowance or charge code qualifier	M	an..3	M	an..3	
C552	Allowance/charge information	C		N		
1230	Allowance or charge identifier	C	an..35	N		Not used
4471	Settlement means code	C	an..3	N		Not used
1227	Calculation sequence code	C	an..3	R	an..3	**1 First step of calculation** **2 Second step of calculation** **3 Third step of calculation** **4 Fourth step of calculation** **5 Fifth step of calculation** **6 Sixth step of calculation** Order in which the discounts are applied to the amount.
C214	Special services identification	C		R		
7161	Special service description code	C	an..3	R	an..3	**DI Discount** **IN Insurance** **FC Freight charge** **PC Packing** **MC Material surcharge (special materials)** **CAI Cutting charge** Type of surcharge or discount coded
1131	Code list identification code	C	an..17	N		Not used
3055	Code list responsible agency code	C	an..3	C	an..3	**9 GS1**
7160	Special service description	C	an..35	O	an..35	Description of the surcharge or discount

Remark:
Description of the surcharge or discount:
e.g. promotional discount, freight charges, packaging charges etc.
Document conditions on the item are independent of those in the document header, i.e. all conditions always apply
(Conditions in the item part do not overwrite the conditions in the header).

The specification of surcharges/discounts must be made according to the calculation sequence.

For each surcharge/discount, the discount amount (MOA+8) and the costing level must be explicitly specified.
If a percentage surcharge/discount is involved, it is also mandatory to specify the base amount (MOA+25).

Example:
`ALC+A+++1+DI::9'`
This item is discounted.

```
ALC+A+++1+DI::9'
MOA+8:10.35:EUR'
```
A position discount in the amount of 10.35 EUR is granted.

```
ALC+C+++1+FC::9:Frachtkosten'
```

Tag = Object-Name
No. = Segment-Number in Guide
MaxOcc = Max. Occurence of Segment/Group
Index = Index-Number of Segment/Group (in Standard)

St = Status
EDIFACT: M=Mandatory, C=Conditional
Usage: R=Required, O=Optional, D=Dependent, A=Advised, N=Not used

© 2019, IWOfurn Service GmbH

Segments

```
MOA+8:20:EUR'
```

Freight charges of 20.00 EUR will be applied to this item.

© 2019, IWOfurn Service GmbH

Segments

Index	No.	Tag	St	MaxOcc	Level	Description
1090		**SG26**	C	9999999	1	**Item position**
		1. Invoiced unit (basic article, assortment, container, set ...)				
1720		**SG39**	O	30	2	**Surcharges and discounts on position**
1800		**SG41**	D	1	3	**Percentage**
1810	77	**PCD**	M	1	3	**Percentage details**

		Standard		Implementation		
Name	Description	St	Format	St	Format	Usage / Remark
PCD						
C501	Percentage details	M		M		
5245	Percentage type code qualifier	M	an..3	R	an..3	**3 Allowance or charge**
5482	Percentage	C	n..10	R	n..10	Percentage of the surcharge or discount

Remark:
Percentage of the surcharge or discount:
Specifies the percentage value of the surcharge or discount.

Example:
```
PCD+3:5'
```
The surcharge or discount is 5%.

Tag = Object-Name
No. = Segment-Number in Guide
MaxOcc = Max. Occurence of Segment/Group
Index = Index-Number of Segment/Group (in Standard)

St = Status
EDIFACT: M=Mandatory, C=Conditional
Usage: R=Required, O=Optional, D=Dependent, A=Advised, N=Not used

© 2019, IWOfurn Service GmbH

Segments

Index	No.	Tag	St	MaxOcc	Level	Description
1090		**SG26**	C	9999999	1	**Item position**
		1. Invoiced unit (basic article, assortment, container, set ...)				
1720		**SG39**	O	30	2	**Surcharges and discounts on position**
1830		**SG42**	R	1	3	**Amount of money**
1840	78	**MOA**	M	1	3	**Monetary amount**

		Standard		Implementation		
Name	Description	St	Format	St	Format	Usage / Remark
MOA						
C516	Monetary amount	M		M		
5025	Monetary amount type code qualifier	M	an..3	M	an..3	**8 Allowance or charge amount**
5004	Monetary amount	C	n..35	R	n..35	Amount of the surcharge or discount
6345	Currency identification code	C	an..3	R	an..3	**EUR Euro**

Remark:
Amount of the surcharge or discount:
Specifies the amount of the surcharge or discount.

Example:
`MOA+8:20:EUR'`
The surcharge or discount amount is 20.00 EUR

Tag = Object-Name
No. = Segment-Number in Guide
MaxOcc = Max. Occurence of Segment/Group
Index = Index-Number of Segment/Group (in Standard)

St = Status
EDIFACT: M=Mandatory, C=Conditional
Usage: R=Required, O=Optional, D=Dependent, A=Advised, N=Not used

© 2019, IWOfurn Service GmbH

Segments

Index	No.	Tag	St	MaxOcc	Level	Description
1090		**SG26**	C	9999999	1	**Item position**
		1. Invoiced unit (basic article, assortment, container, set ...)				
1720		**SG39**	O	30	2	**Surcharges and discounts on position**
1910		**SG44**	C	5	3	**TAX**
1920	79	**TAX**	M	1	3	**Duty/tax/fee details**

		Standard		Implementation		
Name	Description	St	Format	St	Format	Usage / Remark
TAX						
5283	Duty or tax or fee function code qualifier	M	an..3	M	an..3	**7 Tax**
C241	Duty/tax/fee type	C		R		
5153	Duty or tax or fee type name code	C	an..3	R	an..3	**VAT Value added tax**
C533	Duty/tax/fee account detail	C		N		
5289	Duty or tax or fee account code	M	an..6	N		Not used
5286	Duty or tax or fee assessment basis value	C	an..15	N		Not used
C243	Duty/tax/fee detail	C		R		
5279	Duty or tax or fee rate code	C	an..7	N		Not used
1131	Code list identification code	C	an..17	N		Not used
3055	Code list responsible agency code	C	an..3	N		Not used
5278	Duty or tax or fee rate	C	an..17	R	an..17	**VAT rate**
5305	Duty or tax or fee category code	C	an..3	R	an..3	**S Standard rate** **E Exempt from tax**

Remark:
Value added tax indication

Example:
`TAX+7+VAT+++:::19+S'`
The discount refers to the part of the invoice subject to 19% VAT

Tag = Object-Name
No. = Segment-Number in Guide
MaxOcc = Max. Occurence of Segment/Group
Index = Index-Number of Segment/Group (in Standard)

St = Status
EDIFACT: M=Mandatory, C=Conditional
Usage: R=Required, O=Optional, D=Dependent, A=Advised, N=Not used

© 2019, IWOfurn Service GmbH

Segments

Index	No.	Tag	St	MaxOcc	Level	Description
1090		**SG26**	O	9999999	1	**Variant type of an article item**
		2. Variant type of an article item				
1100	80	**LIN**	M	1	1	**Variant type**

		Standard		Implementation		
Name	Description	St	Format	St	Format	Usage / Remark
LIN						
1082	Line item identifier	C	an..6	R	an..6	
1229	Action request/notification description code	C	an..3	N		Not used
C212	Item number identification	C		A		
7140	Item identifier	C	an..35	R	an..35	Vendor ID of the feature
7143	Item type identification code	C	an..3	R	an..3	**SA Supplier's article number**
C829	Sub-line information	C		R		
5495	Sub-line indicator code	C	an..3	R	an..3	**1 Sub-line information**
1082	Line item identifier	C	an..6	R	an..6	**Item number of the article** Indication of the article to which the variant type belongs

Remark:
All deviations from the assigned configuration (regardless of whether they are executions or additional prices) are specified in the same sub-item logic as for the variant types/variants of the configurations.
The variant type specifications of the position overwrite the specifications of the assigned configuration.

Example:
```
LIN+11++203:SA+1:10'
```
Here follows the information on the variant type "Korpusfarbe innen" (IDM code 203) of article position 10

```
LIN+35++155:SA+1:34'
IMD+C++OP'
LIN+36++K173:SA+1:35'
IMD+C++OPV'
IMD+F++:::Edelstahlfarben'
```
The "Farbe der GlastÃ¼rrahmen" (IDM code 155) for item 34 is "Edelstahl" (manufacturer code "K173").

Tag = Object-Name
No. = Segment-Number in Guide
MaxOcc = Max. Occurence of Segment/Group
Index = Index-Number of Segment/Group (in Standard)

St = Status
EDIFACT: M=Mandatory, C=Conditional
Usage: R=Required, O=Optional, D=Dependent, A=Advised, N=Not used

© 2019, IWOfurn Service GmbH

Segments

Index	No.	Tag	St	MaxOcc	Level	Description
1090		**SG26**	O	9999999	1	**Variant type of an article item**
		2. Variant type of an article item				
1110	81	**PIA**	O	25	2	**Additional product id**

		Standard		Implementation		
Name	Description	St	Format	St	Format	Usage / Remark
PIA						
4347	Product identifier code qualifier	M	an..3	R	an..3	**1 Additional identification**
C212	Item number identification	M		M		
7140	Item identifier	C	an..35	R	an..35	GTIN or customer Id of the feature
7143	Item type identification code	C	an..3	C	an..3	**SRV GS1 Global Trade Item Number** **IN Buyer's item number**

Remark:
Additional identification numbers of the variant type e.g.: GTIN or customer ID

Example:
```
PIA+1+4388726364127:SRV'
```
The GTIN of the variant type is 4388726364127

Tag = Object-Name
No. = Segment-Number in Guide
MaxOcc = Max. Occurence of Segment/Group
Index = Index-Number of Segment/Group (in Standard)

St = Status
EDIFACT: M=Mandatory, C=Conditional
Usage: R=Required, O=Optional, D=Dependent, A=Advised, N=Not used

© 2019, IWOfurn Service GmbH

Segments

Index	No.	Tag	St	MaxOcc	Level	Description
1090		**SG26**	O	9999999	1	**Variant type of an article item**
		2. Variant type of an article item				
1130	82	**IMD**	R	1	2	**Variant type (flag)**

		Standard		Implementation		
Name	Description	St	Format	St	Format	Usage / Remark
IMD						
7077	Description format code	C	an..3	R	an..3	**C Code (from industry code list)**
C272	Item characteristic	C		N		
7081	Item characteristic code	C	an..3	N		Not used
C273	Item description	C		C		
7009	Item description code	C	an..17	R	an..17	**OP Variant type**

Remark:
Segment identifies position as variant type.

Example:
```
IMD+C++OP'
```
The item is flagged as a variant type.

Tag = Object-Name
No. = Segment-Number in Guide
MaxOcc = Max. Occurence of Segment/Group
Index = Index-Number of Segment/Group (in Standard)

St = Status
EDIFACT: M=Mandatory, C=Conditional
Usage: R=Required, O=Optional, D=Dependent, A=Advised, N=Not used

© 2019, IWOfurn Service GmbH

Segments

Index	No.	Tag	St	MaxOcc	Level	Description
1090		**SG26**	O	9999999	1	**Variant type of an article item**
		2. Variant type of an article item				
1130	83	**IMD**	R	1	2	**Name of the variant type**

		Standard		Implementation		
Name	Description	St	Format	St	Format	Usage / Remark
IMD						
7077	Description format code	C	an..3	R	an..3	**F Designation of the variant type**
C272	Item characteristic	C		N		
7081	Item characteristic code	C	an..3	N		Not used
C273	Item description	C		R		
7009	Item description code	C	an..17	N		Not used
1131	Code list identification code	C	an..17	N		Not used
3055	Code list responsible agency code	C	an..3	N		Not used
7008	Item description	C	an..256	R	an..256	Designation of the variant type

Remark:
Segment contains the name of the variant type.
The designation of the variant type must always be specified.

Example:
`IMD+A++:::Korpusausführung'`
The name of the variant type is "KorpusausfÃ¼hrung".

Tag = Object-Name
No. = Segment-Number in Guide
MaxOcc = Max. Occurence of Segment/Group
Index = Index-Number of Segment/Group (in Standard)

St = Status
EDIFACT: M=Mandatory, C=Conditional
Usage: R=Required, O=Optional, D=Dependent, A=Advised, N=Not used

© 2019, IWOfurn Service GmbH

Segments

Index	No.	Tag	St	MaxOcc	Level	Description
1090		**SG26**	O	9999999	1	**Variant of an item position**
		3. Variant of an article position				
1100	84	**LIN**	M	1	1	**Variant**

		Standard		Implementation		
Name	Description	St	Format	St	Format	Usage / Remark
LIN						
1082	Line item identifier	C	an..6	R	an..6	
1229	Action request/notification description code	C	an..3	N		Not used
C212	Item number identification	C		O		
7140	Item identifier	C	an..35	R	an..35	**Vendor ID of the option** T_NEW_CATALOG/FEATURE_DEFINITION/FEATURES/FEATURE/OPTIONS/OPTION/OPTION_KEY when specifying the program (IDM variant type 1), the program key is specified here: T_NEW_CATALOG/FEATURE_DEFINITION/FEATURES/FEATURE/OPTIONS/OPTION/STYLE_REF/STYLE_NO When specifying the plinth height (IDM variant type 402), the actual plinth height is given here in mm.
7143	Item type identification code	C	an..3	R	an..3	**SA Supplier's article number**
C829	Sub-line information	C		R		
5495	Sub-line indicator code	C	an..3	R	an..3	**1 Sub-line information**
1082	Line item identifier	C	an..6	R	an..6	Item number of the variant type to which this variant is assigned.

Remark:
This segment group is used to represent the variant of a variant type.
A variant represents a variant type value (consisting of variant code and variant description).
Only one variant is allowed per variant type.

The variant code corresponds to the attribute
T_NEW_CATALOG/FEATURE_DEFINITION/FEATURES/FEATURE/OPTIONS/OPTION/OPTION_KEY

The "program" (IDM code 1) and the "base height"(IDM code 402) are exceptions.
If the program is specified, the program key is specified here:
T_NEW_CATALOG/FEATURE_DEFINITION/FEATURES/FEATURE/OPTIONS/OPTION/STYLE_REF/STYLE_NO

When specifying the base height, the real base height in mm is specified here and not the OPTION_KEY.

Example:
```
LIN+12++DM-WS:SA+1:11'
```
The variant (item 12) is a sub-item of the variant type "KorpusausfÃ¼hrung" (item 11) and has the ID "DM-WS".

Tag = Object-Name
No. = Segment-Number in Guide
MaxOcc = Max. Occurence of Segment/Group
Index = Index-Number of Segment/Group (in Standard)

St = Status
EDIFACT: M=Mandatory, C=Conditional
Usage: R=Required, O=Optional, D=Dependent, A=Advised, N=Not used

© 2019, IWOfurn Service GmbH

Segments

Index	No.	Tag	St	MaxOcc	Level	Description
1090		**SG26**	O	9999999	1	**Variant of an item position**
		3. Variant of an article position				
1110	85	**PIA**	O	25	2	**Additional product id**

		Standard		Implementation		
Name	Description	St	Format	St	Format	Usage / Remark
PIA						
4347	Product identifier code qualifier	M	an..3	M	an..3	**1 Additional identification**
C212	Item number identification	M		M		
7140	Item identifier	C	an..35	R	an..35	GTIN or customer Id of the variant
7143	Item type identification code	C	an..3	R	an..3	**SRV GS1 Global Trade Item Number** **IN Buyer's item number**

Remark:
Additional identification numbers of the variant e.g.: GTIN or customer ID

Example:
```
PIA+1+43556277645385:SRV'
```
The GTIN of the variant is 43556277645385

© 2019, IWOfurn Service GmbH

Segments

Index	No.	Tag	St	MaxOcc	Level	Description
1090		**SG26**	O	9999999	1	**Variant of an item position**
		3. Variant of an article position				
1130	86	**IMD**	R	99	2	**Variant (flag)**

		Standard		Implementation		
Name	Description	St	Format	St	Format	Usage / Remark
IMD						
7077	Description format code	C	an..3	R	an..3	**C Code (from industry code list)**
C272	Item characteristic	C		N		
7081	Item characteristic code	C	an..3	N		Not used
C273	Item description	C		R		
7009	Item description code	C	an..17	R	an..17	**OPV Variant**

Remark:
Segment identifies the item as a variant.

Example:
```
IMD+C++OPV'
```
The item position is flagged as variant

Tag = Object-Name
No. = Segment-Number in Guide
MaxOcc = Max. Occurence of Segment/Group
Index = Index-Number of Segment/Group (in Standard)

St = Status
EDIFACT: M=Mandatory, C=Conditional
Usage: R=Required, O=Optional, D=Dependent, A=Advised, N=Not used

© 2019, IWOfurn Service GmbH

Segments

Index	No.	Tag	St	MaxOcc	Level	Description
1090		**SG26**	O	9999999	1	**Variant of an item position**
		3. Variant of an article position				
1130	87	**IMD**	A	99	2	**Variant name**

		Standard		Implementation		
Name	Description	St	Format	St	Format	Usage / Remark
IMD						
7077	Description format code	C	an..3	R	an..3	**F Variant name**
C272	Item characteristic	C		N		
7081	Item characteristic code	C	an..3	N		Not used
C273	Item description	C		R		
7009	Item description code	C	an..17	N		Not used
1131	Code list identification code	C	an..17	N		Not used
3055	Code list responsible agency code	C	an..3	N		Not used
7008	Item description	C	an..256	R	an..256	**Variant name** T_NEW_CATALOG/FEATURE_DEFINITION/FEATURES/ FEATURE/OPTIONS/OPTION/OPTION_TEXT/ TEXT_LINE/TEXT

Remark:
Segment contains the name of the variant.

Example:
```
IMD+F++:::Damast weiß'
```
The variant designation of the carcase version is "Damask white".

Tag = Object-Name
No. = Segment-Number in Guide
MaxOcc = Max. Occurence of Segment/Group
Index = Index-Number of Segment/Group (in Standard)

St = Status
EDIFACT: M=Mandatory, C=Conditional
Usage: R=Required, O=Optional, D=Dependent, A=Advised, N=Not used

© 2019, IWOfurn Service GmbH

Segments

Index	No.	Tag	St	MaxOcc	Level	Description
1090		**SG26**	O	9999999	1	**Subitem of an assortment**
		4. Subitem of a set, display or container content				
1100	88	**LIN**	M	1	1	**Line item**

		Standard		Implementation		
Name	Description	St	Format	St	Format	Usage / Remark
LIN						
1082	Line item identifier	C	an..6	R	an..6	
1229	Action request/notification description code	C	an..3	N		Not used
C212	Item number identification	C		A		
7140	Item identifier	C	an..35	R	an..35	GTIN of the article
7143	Item type identification code	C	an..3	R	an..3	**SRV GS1 Global Trade Item Number**
C829	Sub-line information	C		R		
5495	Sub-line indicator code	C	an..3	R	an..3	**1 Sub-line information**
1082	Line item identifier	C	an..6	R	an..6	

Remark:
This segment group is used to represent assortment contents.
This also includes sets, displays and containers.
In contrast to the representation of variant articles, the flagging of the main article is not necessarily required here.
In principle, all assortment contents are presented as main articles with several sub-items.

In principle, sub-items can contain all segments that are also used for a standard item or the main item.
Make sure that only all billable items have a total item value (MOA+203).

It applies:
Adding up all the total item values gives the total goods value of the invoice,
i.e. sub-items may not have item amounts that are already included in the main item,
however, it is allowed to specify item amounts in main and sub-items where it makes sense to do so
(e.g.: for sub-items represent the price markups that are not included in the main item).

Contains the position number and the Gtin of the position incl. the reference to the parent position.

Example:
```
LIN+21++4312345678910:SRV+1:20'
```
Item 21 with GTIN 4312345678910 is a subitem of item 20

```
LIN+10++7630-SET:SA'
IMD+A++:::Sitzgarnitur Dream'
QTY+21:1:EA'
MOA+203:999:EUR'
PRI+AAA+999:::1:PCE'
LIN+20++7630-003:SA+1:10'
IMD+A++:::3-Sitzer Dream'
QTY+21:1:PCE'
LIN+30++7630-001:SA+1:10'
IMD+A++:::1-Sitzer Dream'
QTY+21:2:PCE'
```
A set of seats (ArtNr.: 7630-SET) for the price of 999,00 EUR consisting of one 3-seater and two 1-seater.

```
LIN+10++7630-SET-C:SA'
IMD+A++:::Sitzgarnitur Custom Dream'
QTY+21:1:EA'
MOA+203:999:EUR'
PRI+AAA+999:::1:PCE'
```

Tag = Object-Name
No. = Segment-Number in Guide
MaxOcc = Max. Occurence of Segment/Group
Index = Index-Number of Segment/Group (in Standard)

St = Status
EDIFACT: M=Mandatory, C=Conditional
Usage: R=Required, O=Optional, D=Dependent, A=Advised, N=Not used

© 2019, IWOfurn Service GmbH

Segments

```
LIN+20++7630-003:SA+1:10'
IMD+A++:::3-Sitzer Dream'
IMD+C++BA'
QTY+21:1:PCE'
LIN+21+++1:20'
IMD+A++:::Ausfuehrung Fuss'
IMD+C++OP'
LIN+22+++1:21'
IMD+A++:::Helsinki'
IMD+C++OPV'
LIN+30++7630-001:SA+1:10'
IMD+A++:::1-Sitzer Dream'
QTY+21:2:PCE'
```

A seating set (ArtNo.: 7630-SET-C) for the price of 999,00 EUR consisting of one configurable 3-seater (design foot: Helsinki) and two 1-seater (not configurable)

© 2019, IWOfurn Service GmbH

Segments

Index	No.	Tag	St	MaxOcc	Level	Description
1090		**SG26**	O	9999999	1	**Subitem of an assortment**
		4. Subitem of a set, display or container content				
1130	89	**IMD**	O	99	2	**Consumer unit (flag)**

		Standard		Implementation		
Name	Description	St	Format	St	Format	Usage / Remark
IMD						
7077	Description format code	C	an..3	C	an..3	**C Code (from industry code list)**
C272	Item characteristic	C		N		
7081	Item characteristic code	C	an..3	N		Not used
C273	Item description	C		C		
7009	Item description code	C	an..17	C	an..17	**CU Consumer unit (GS1 Permanent Code)** The article is a consumer unit for a higher-level assortment unit.

Remark:
Whether it is a sales unit or a foreign article, for example. Further information can be found in the code list.

Example:
```
IMD+C++CU'
```
The item is a consumer unit.

Tag = Object-Name
No. = Segment-Number in Guide
MaxOcc = Max. Occurence of Segment/Group
Index = Index-Number of Segment/Group (in Standard)

St = Status
EDIFACT: M=Mandatory, C=Conditional
Usage: R=Required, O=Optional, D=Dependent, A=Advised, N=Not used

© 2019, IWOfurn Service GmbH

Segments

Index	No.	Tag	St	MaxOcc	Level	Description
1090		**SG26**	O	9999999	1	**Subitem of an assortment**
		4. Subitem of a set, display or container content				
1250		**SG27**	C	1	2	**Final invoice amount**
		Message footer summary part				
1260	90	**MOA**	M	1	2	**Final invoice amount**

		Standard		Implementation		
Name	Description	St	Format	St	Format	Usage / Remark
MOA						
C516	Monetary amount	M		M		
5025	Monetary amount type code qualifier	M	an..3	M	an..3	**77 Invoice amount**
5004	Monetary amount	C	n..35	R	n..35	**Final invoice amount**
6345	Currency identification code	C	an..3	R	an..3	**EUR Euro**

Remark:
Final invoice amount incl. VAT.
Total amount of the invoice after deducting all discounts and adding all surcharges and taxes and calculating VAT.
This is the amount due.

Example:
`MOA+77:822.88:EUR'`
The final invoice amount is 822,88 EUR

Tag = Object-Name
No. = Segment-Number in Guide
MaxOcc = Max. Occurence of Segment/Group
Index = Index-Number of Segment/Group (in Standard)

St = Status
EDIFACT: M=Mandatory, C=Conditional
Usage: R=Required, O=Optional, D=Dependent, A=Advised, N=Not used

© 2019, IWOfurn Service GmbH

Segments

Index	No.	Tag	St	MaxOcc	Level	Description
1090		**SG26**	O	9999999	1	**Subitem of an assortment**
		4. Subitem of a set, display or container content				
1250		**SG27**	A	99	2	**Other invoice amounts**
		Message footer summary part				
1260	91	**MOA**	M	1	2	**Monetary amount**

		Standard		Implementation		
Name	Description	St	Format	St	Format	Usage / Remark
MOA						
C516	Monetary amount	M		M		
5025	Monetary amount type code qualifier	M	an..3	M	an..3	Mandatory or sales tax-relevant information: **79 Total line items amount** Total amount of all items in the invoice, excluding taxes (net price x quantity). **124 Tax amount** **125 Taxable amount** Other amount qualifier: **22 Cash on delivery amount** **23 Charge amount** **86 Message total monetary amount** **44 Declared value for carriage** **113 Prepaid amount** **131 Total charges/allowances** **90 Bonus eligible amount** **233 Not bonus relevant**
5004	Monetary amount	C	n..35	R	n..35	
6345	Currency identification code	C	an..3	R	an..3	**EUR Euro**

Remark:
Other invoice amounts:
Additional amounts can be specified here.

Example:
`MOA+79:691.50:EUR'`
The total position amount is 691.50 EUR

`MOA+124:131.38:EUR'`
The VAT portion of the invoice is 131.85 EUR

`MOA+125:691.50:EUR'`
The taxable amount is 691.50 EUR

Tag = Object-Name
No. = Segment-Number in Guide
MaxOcc = Max. Occurence of Segment/Group
Index = Index-Number of Segment/Group (in Standard)

St = Status
EDIFACT: M=Mandatory, C=Conditional
Usage: R=Required, O=Optional, D=Dependent, A=Advised, N=Not used

© 2019, IWOfurn Service GmbH

Segments

Index	No.	Tag	St	MaxOcc	Level	Description
1090		**SG26**	O	9999999	1	**Subitem of an assortment**
		4. Subitem of a set, display or container content				
1550		**SG34**	D	99	2	**Tax amounts**
		Message footer summary part per tax rate This segment is used to transfer the taxpayer and tax amount at the specified tax rate. This segment group must be used only if the invoices contain more than one VAT rate.				
1560	92	**TAX**	M	1	2	**Tax rate**

		Standard		Implementation		
Name	Description	St	Format	St	Format	Usage / Remark
TAX						
5283	Duty or tax or fee function code qualifier	M	an..3	M	an..3	**7 Tax**
C241	Duty/tax/fee type	C		C		
5153	Duty or tax or fee type name code	C	an..3	C	an..3	**VAT Value added tax**
C533	Duty/tax/fee account detail	C		N		
5289	Duty or tax or fee account code	M	an..6	N		Not used
5286	Duty or tax or fee assessment basis value	C	an..15	N		Not used
C243	Duty/tax/fee detail	C		C		
5279	Duty or tax or fee rate code	C	an..7	N		Not used
1131	Code list identification code	C	an..17	N		Not used
3055	Code list responsible agency code	C	an..3	N		Not used
5278	Duty or tax or fee rate	C	an..17	C	an..17	Tax rate
5305	Duty or tax or fee category code	C	an..3	C	an..3	**E Exempt from tax** **S Standard rate** **O Services outside scope of tax**

Remark:
This segment is used to transfer the taxpayer and tax amount at the specified tax rate.
This segment group must be used only if the invoices contain more than one VAT rate.

Example:
```
TAX+7+VAT+++:::19+S'
```
The tax rate is 19%. This is a standard tax rate.

```
TAX+7+VAT+++:::7+S'
MOA+124:48.40:EUR'
MOA+125:697.14:EUR'
```
EUR 48.40 sales tax is due on the portion of the invoice with 7% tax (EUR 697.14).

Tag = Object-Name
No. = Segment-Number in Guide
MaxOcc = Max. Occurence of Segment/Group
Index = Index-Number of Segment/Group (in Standard)

St = Status
EDIFACT: M=Mandatory, C=Conditional
Usage: R=Required, O=Optional, D=Dependent, A=Advised, N=Not used

© 2019, IWOfurn Service GmbH

Segments

Index	No.	Tag	St	MaxOcc	Level	Description
1090		**SG26**	O	9999999	1	**Subitem of an assortment**
		4. Subitem of a set, display or container content				
1550		**SG34**	D	99	2	**Tax amounts**
		Message footer summary part per tax rate This segment is used to transfer the taxpayer and tax amount at the specified tax rate. This segment group must be used only if the invoices contain more than one VAT rate.				
1570	93	**MOA**	R	2	3	**Tax amount of the tax rate**

		Standard		Implementation		
Name	Description	St	Format	St	Format	Usage / Remark
MOA						
C516	Monetary amount	M		M		
5025	Monetary amount type code qualifier	M	an..3	M	an..3	**124 Tax amount**
5004	Monetary amount	C	n..35	R	n..35	**Tax amount of the tax rate**
6345	Currency identification code	C	an..3	R	an..3	**EUR Euro**

Remark:
tax amount:
The amount of VAT

Example:
```
MOA+124:131.38:EUR'
```

Tag = Object-Name
No. = Segment-Number in Guide
MaxOcc = Max. Occurence of Segment/Group
Index = Index-Number of Segment/Group (in Standard)

St = Status
EDIFACT: M=Mandatory, C=Conditional
Usage: R=Required, O=Optional, D=Dependent, A=Advised, N=Not used

© 2019, IWOfurn Service GmbH

Segments

Index	No.	Tag	St	MaxOcc	Level	Description
1090		**SG26**	O	9999999	1	**Subitem of an assortment**

4. Subitem of a set, display or container content

1550		**SG34**	D	99	2	**Tax amounts**

Message footer summary part per tax rate
This segment is used to transfer the taxpayer and tax amount at the specified tax rate.
This segment group must be used only if the invoices contain more than one VAT rate.

1570	94	**MOA**	C	2	3	**Taxable amount of the tax rate**

		Standard		Implementation		
Name	Description	St	Format	St	Format	Usage / Remark
MOA						
C516	Monetary amount	M		M		
5025	Monetary amount type code qualifier	M	an..3	M	an..3	**125 Taxable amount**
5004	Monetary amount	C	n..35	R	n..35	**Taxable amount of the tax rate**
6345	Currency identification code	C	an..3	R	an..3	**EUR Euro**

Remark:
Taxable amount:
The amount of the invoice minus discount, plus surcharges without VAT.

Example:
```
MOA+125:691.50:EUR'
```
The taxable amount with 19% VAT. Share amounts to 691.50 EUR

Tag = Object-Name
No. = Segment-Number in Guide
MaxOcc = Max. Occurence of Segment/Group
Index = Index-Number of Segment/Group (in Standard)

St = Status
EDIFACT: M=Mandatory, C=Conditional
Usage: R=Required, O=Optional, D=Dependent, A=Advised, N=Not used

© 2019, IWOfurn Service GmbH

Segments

Index	No.	Tag	St	MaxOcc	Level	Description
1090		**SG26**	O	9999999	1	**Subitem of an assortment**

4. Subitem of a set, display or container content

1550		**SG34**	D	99	2	**Tax amounts**

Message footer summary part per tax rate
This segment is used to transfer the taxpayer and tax amount at the specified tax rate.
This segment group must be used only if the invoices contain more than one VAT rate.

1570	95	**MOA**	C	2	3	**Total item amount of the tax rate**

		Standard		Implementation		
Name	Description	St	Format	St	Format	Usage / Remark
MOA						
C516	Monetary amount	M		M		
5025	Monetary amount type code qualifier	M	an..3	M	an..3	**79 Total line items amount**
5004	Monetary amount	C	n..35	R	n..35	**Total item amount of the tax rate**
6345	Currency identification code	C	an..3	R	an..3	**EUR Euro**

Remark:
Total item amount

Example:
```
MOA+79:691.50:EUR'
```
The total item amount of all items with 19% VAT is 691.50 EUR

Tag = Object-Name
No. = Segment-Number in Guide
MaxOcc = Max. Occurence of Segment/Group
Index = Index-Number of Segment/Group (in Standard)

St = Status
EDIFACT: M=Mandatory, C=Conditional
Usage: R=Required, O=Optional, D=Dependent, A=Advised, N=Not used

© 2019, IWOfurn Service GmbH

Segments

Index	No.	Tag	St	MaxOcc	Level	Description
1090		**SG26**	O	9999999	1	**Subitem of an assortment**
		4. Subitem of a set, display or container content				
1550		**SG34**	D	99	2	**Tax amounts**
		Message footer summary part per tax rate This segment is used to transfer the taxpayer and tax amount at the specified tax rate. This segment group must be used only if the invoices contain more than one VAT rate.				
1570	96	**MOA**	C	2	3	**Total surcharges/discounts to the tax rate**

		Standard		Implementation		
Name	Description	St	Format	St	Format	Usage / Remark
MOA						
C516	Monetary amount	M		M		
5025	Monetary amount type code qualifier	M	an..3	M	an..3	**131 Total charges/allowances**
5004	Monetary amount	C	n..35	R	n..35	**Total surcharges/discounts to the tax rate**
6345	Currency identification code	C	an..3	R	an..3	**EUR Euro**

Remark:
Discount amount

Example:
`MOA+131:9:EUR'`
The total sum of all surcharges of the items with 19% VAT share is 9,00 EUR

Tag = Object-Name
No. = Segment-Number in Guide
MaxOcc = Max. Occurence of Segment/Group
Index = Index-Number of Segment/Group (in Standard)

St = Status
EDIFACT: M=Mandatory, C=Conditional
Usage: R=Required, O=Optional, D=Dependent, A=Advised, N=Not used

© 2019, IWOfurn Service GmbH

Segments

Index	No.	Tag	St	MaxOcc	Level	Description
2320	97	**UNT**	M	1	0	**Message trailer**

		Standard		Implementation		
Name	Description	St	Format	St	Format	Usage / Remark
UNT						
0074	Number of segments in the message	M	n..6	M	n..6	
0062	Message reference number	M	an..14	M	an..14	Unique message reference of the sender. Identical to DE 0062 in UNH.

Remark:
segment counter

Example:
`UNT+94+1'`
The document consists of 94 segments

Tag = Object-Name
No. = Segment-Number in Guide
MaxOcc = Max. Occurence of Segment/Group
Index = Index-Number of Segment/Group (in Standard)

St = Status
EDIFACT: M=Mandatory, C=Conditional
Usage: R=Required, O=Optional, D=Dependent, A=Advised, N=Not used

© 2019, IWOfurn Service GmbH

Segments

Index	No.	Tag	St	MaxOcc	Level	Description
0000	98	**UNZ**	M	1	0	**Interchange trailer**

		Standard		Implementation		
Name	Description	St	Format	St	Format	Usage / Remark
UNZ						
0036	Interchange control count	M	n..6	M	n..6	
0020	Interchange control reference	M	an..14	M	an..14	Unique data exchange reference number (file counter). Corresponds to the specification in UNB 0020.

Remark:

Example:

```
UNZ+1+1'
```

The message contains 1 document.

Tag = Object-Name
No. = Segment-Number in Guide
MaxOcc = Max. Occurence of Segment/Group
Index = Index-Number of Segment/Group (in Standard)

St = Status
EDIFACT: M=Mandatory, C=Conditional
Usage: R=Required, O=Optional, D=Dependent, A=Advised, N=Not used

© 2019, IWOfurn Service GmbH

Example

No.	Name	Example
1	**UNA**	`UNA:+.? '`
2	**UNB**	`UNB+UNOC:3+4041116000009:14+4399901793453:14+20180524:0930+1+++++DCC-INVOIC-V1.0-Küche'` The sender of the message is 4041116000009, the recipient is 4399901793453. The message was created on 24.05.2018 at 09:30h and has the unique reference number 1.
Message header		
3	**UNH**	`UNH+1+INVOIC:D:01B:UN:EAN010'` This message is an Edifact INVOIC.
4	**BGM**	`BGM+380+RE18129+9'` This document is a commercial invoice with document number RE18129.
5	**DTM**	`DTM+137:20180524:102'` The document was created on 24.05.2018.
6	**DTM**	`DTM+35:20180503:102'` The performance date (corresponds to the delivery date) of the order is 05.05.2018
7	**DTM**	`DTM+200:20180428:102'` The shipment was handed over to the carrier on 28.04.2018
8	**ALI**	`ALI+++000'` This is a standard stock order

9	**FTX**	`FTX+REG+1++steuerfreie innergemeinschaftliche Lieferung'`
		It is a tax-free intra-Community supply.
		`FTX+AAK+1++Es ergeben sich Entgeltminderungen auf Grund von Rabatt- oder Bonusvereinbarungen'`
		Text on the reduction of remuneration

10	**FTX**	`FTX+MUL+1+50+Rechnung.pdf:99:Rechnungskopie'`
		There is a copy of the invoice attached in PDF format
		`FTX+MUL+1+50+GRD2873.pdf+11+Grundrissplan aus Planungssystem'`
		There is a floor plan (PDF file) attached with the file name GRD2873.pdf.

	SG1	

11	**RFF**	`RFF+CR:OBJ2638'`
		The commission number is OBJ2638
		
		`RFF+UC:Mueller Lohe'`
		The kitchen commission name is "Mueller Lohe."

	SG1	
12	**RFF**	`RFF+ON:BE7732'` The document number of the order is BE7732
13	**DTM**	`DTM+171:20180427:102'` The document date of the order is 27.04.2018
	SG1	
14	**RFF**	`RFF+ABO:XAD376S'` The unique barcode number/document archive number is XAD376S.
	SG1	
15	**RFF**	`RFF+POR:AB123456'` The order response number is AB123456
16	**DTM**	`DTM+171:20180427:102'` The document date is 27.04.2018
	SG1	

No. = Segment-Number in Guide

© 2019, IWOfurn Service GmbH

Example

No.	Name	Example
17	**RFF**	`RFF+DQ:LI4872924'` The delivery note number is LI4872924
18	**DTM**	`DTM+171:20180131:102'` The document date of the delivery note is 31.01.2018
	SG1	
19	**RFF**	`RFF+OI:RE18120/V'` The invoice number of the previously issued invoice is RE18120/V
20	**DTM**	`DTM+171:20180428:102'` The previous invoice was issued on 28.04.2018.
	SG1	
21	**RFF**	`RFF+OP:627482345672'` The original sales order number (e.g. order number from online store) is 627482345672
22	**DTM**	`DTM+171:20180131:102'` The document date of the referenced document is 31.01.2018
	SG2	

23	**NAD**	`NAD+BY+8765432123456::9'`
		The GLN of the buyer is 8765432123456
		`NAD+DP++Hans Meyer+Musterstraße 1+Musterstadt+77777+DE'`
		The shipping address is:
		Hans Meyer
		Sample street 1
		77777 Sample city
		Germany

	SG3	
24	**RFF**	`RFF+VA:DE4324789142'` The VAT ID of the party concerned is DE4324789142
	SG3	
25	**RFF**	`RFF+FC:12345-131312'` The tax number of the party involved is 12345-131312
	SG3	
26	**RFF**	`RFF+AGB:832637'` The customer number at the central regulator is 832637
	SG3	
27	**RFF**	`RFF+CT:VAB-938/18'` The contract number is VAB-938/18
	SG3	
28	**RFF**	`RFF+IT:KD98234'` The customer number is KD98234
	SG3	
29	**RFF**	`RFF+XA:DE 12345678'` The WEEE registration number is DE 12345678
	SG5	
30	**CTA**	`CTA+MGR+EK:Einkauf'` Contact person is the purchasing manager

No. = Segment-Number in Guide

© 2019, IWOfurn Service GmbH

Example

No.	Name	Example
31	**COM**	`COM+0711 1234567:TE'` The phone number is 0711/1234567
	SG6	
32	**TAX**	`TAX+7+VAT+++:::19+S'` The applicable tax rate of the document is 19%.
	SG7	
33	**CUX**	`CUX+2:EUR'` The document was invoiced in EURO
	SG8	

34	**PAT**	`PAT+3'`
		`DTM+13:20180626:102'`
		The due date is specified as a fixed date and is 26.06.2018

35	**DTM**	`DTM+13:20180525:102'`
	SG8	

36	**PAT**	`PAT+3'`
		`DTM+209:20180625:102'`
		The value date is given as a fixed date and is 25.06.2018.

37	**DTM**	`DTM+209:20180525:102'` The value date is 25.05.2018
	SG8	

38	**PAT**	`PAT+3'`
		`PAT+3'`
		`DTM+209:20180514:102'`
		`PCD+12:9'`
		`MOA+8:12.57:EUR'`
		The discount date is specified as a fixed date and is 14.05.2018.
		A 9% discount may be deducted.
		This corresponds to a discount in the amount of EUR 12.57.

39	**DTM**	`DTM+12:20180514:102'` The due date for discount is 14.05.2018
40	**PCD**	`PCD+12:9'` A discount of 9% will be given.
41	**MOA**	`MOA+8:12.57:EUR'` The discount amount is 12,57 EUR
	SG16	

No. = Segment-Number in Guide

© 2019, IWOfurn Service GmbH

Example

No.	Name	Example

42	**ALC**	`ALC+A+:1++1+DI:::Frühlingsrabatt.'`
		
		`ALC+A+WG23:CG++1+GC::9:Warengruppenrabatt auf WG23 (10%)'`
		`PCD+3:10'`
		`MOA+25:200:EUR'`
		`MOA+8:20:EUR'`
		A discount of 10% on the base amount 200.00 EUR (=20.00 EUR) is granted for the product group WG23.
		`ALC+N+WG1:CG+++GC::9:Summe WG1'`
		`MOA+25:2619.2'`
		`ALC+A+WG1:CG++1+GC::9:Rabat W508'`
		`MOA+8:955'`
		`MOA+25:2619.2'`
		`ALC+A+WG1:CG++2+GC::9:Sofortrabatt'`
		`PCD+3:26'`
		`MOA+8:432.69'`
		`MOA+25:1664.2'`
		Total WG1 : 2.619,20 EUR
		- Discount W508 : 955,00 EUR (Calculation level 1)
		- Immediate discount (25%) : 432,69 EUR (Calculation level 2)
		= Subtotal : 1.231,51 EUR (is not specified)
		`ALC+N+WG2:CG+++GC::9:Summe WG2'`
		`MOA+25:34'`
		Sum WG2 : 34,00 EUR
		(Informative without subsequent discounts or surcharges).
		
		`LIN+10'`
		`PIA+5+WG23:CG:91'`
		Article position 10 is marked as article of product group WG23

	SG19	
43	**PCD**	`PCD+3:5'` The surcharge or discount is 5%
	SG20	
44	**MOA**	`MOA+8:10.22:EUR'` The surcharge or discount amount is 10.22 EUR
1. Invoiced unit (basic article, assortment, container, set ...)		
	SG26	
45	**LIN**	`LIN+1++4312345678910:SRV'` The item position 1 has the GTIN 4312345678910
46	**PIA**	`PIA+5+4312345678910:SRV::91'` The GTIN of the item is 4312345678910
47	**PIA**	`PIA+5+230:36::91'` The IDM manufacturer ID is 230
48	**PIA**	`PIA+5+182346278:MF::91'` The manufacturer EDV number of the item is 182346278
49	**PIA**	`PIA+5+FT3467:VP::91'` The manufacturing type of the item is FT3467
50	**PIA**	`PIA+5+TG2:GU::91'` The exchange group of the item is TG2
51	**PIA**	`PIA+5+WG23:CG::91'` The product group of the article is WG23

No. = Segment-Number in Guide

© 2019, IWOfurn Service GmbH

Example

No.	Name	Example

52	PIA	`PIA+1+12345:SA'`
		The manufacturer article number is 12345
		
		`PIA+1+94016100:HS'`
		The customs tariff number of the item is 94016100

53	PIA	`PIA+1+LRU:68::91'` The viewing sides of the item are: Left, Right and Bottom
54	IMD	`IMD+A++:::Funktions Sofa Holle:Holle Schlafsofa'` The supplier/invoicing party's item name is "Funktions-Sofa Holle", and the item's customer name is "Holle Schlafsofa".

55	IMD	`IMD+C++BA'`
		This is a base item (a configurable item that is further specified via options).
		
		`IMD+C++TU'`
		This item is a commercial unit.

56	IMD	`IMD+C++IN'` This is an invoicing unit.
57	IMD	`IMD+F++13::91:PEFC'` The article has the quality flag "PEFC".
58	MEA	`MEA+AAE+WD+MMT:1200'` The width of the article is 1200mm
59	QTY	`QTY+47:2:PCE'` The calculated quantity is 2 pieces.

60	QTY	`QTY+12:10:PCE'`
		The delivered quantity is 3 pieces.
		
		`QTY+21:3:PCE'`
		3 pieces were ordered.
		
		`QTY+192:1:PCE'`
		The quantity not charged is 1 piece

61	DTM	`DTM+2:20180514:102'` The required delivery date for this item is 14.05.2018.
62	FTX	`FTX+ZZZ+1++Freitext 1:Freitext 2:Freitext 3'` Freetext information about the article
	SG27	
63	MOA	`MOA+203:1047.99:EUR'` The position amount is 1047.99 EUR
	SG27	
64	MOA	`MOA+131:-2.55:EUR'` This item includes a 2.55 EUR discount.
	SG27	
65	MOA	`MOA+43:1050:EUR'` The total declared customs value is 1050 EUR
	SG29	

No. = Segment-Number in Guide

© 2019, IWOfurn Service GmbH

Example

No.	Name	Example
66	**PRI**	**PRI+AAA:230.50'** The net price is 230.50 per piece **PRI+AAA:1240.90:::100:KGM'** The net price is 1240.90 per 100 Kg
	SG29	
67	**PRI**	**PRI+AAB:4.79'** The gross price is 4.79 per piece **PRI+AAA:1240.90:::100:KGM'** The net price is 1240.90 per 100 Kg
	SG29	
68	**PRI**	**PRI+AAE:799::SRP'** The recommended retail sales price of the item is 799.00 (tax included) per piece.
	SG30	
69	**RFF**	**RFF+ON:BE7732:1'** The invoice item refers to item 1 of purchase order BE7732
70	**DTM**	**DTM+171:20180427:102'** The date of the reference is 24.04.2018
	SG30	
71	**RFF**	**RFF+YB4:OBJ2638'** The invoice item refers to the commission OBJ2638 **RFF+CR:K1256-3'** The kitchen commission number is K1256-3 **RFF+UC:Mueller Lohe'** The kitchen commission name is "Mueller Lohe"
	SG30	
72	**RFF**	**RFF+OP:12314:2'** The order item refers to item 2 of the original sales order with the number 12314
73	**DTM**	**DTM+171:20180131:102'** The date of the reference is 31.01.2018
	SG31	
74	**PAC**	**PAC+3++201'** The position consists of 3 EURO pallets
	SG34	
75	**TAX**	**TAX+7+VAT+++:::19+S'** The item has a VAT unit rate of 19% **TAX+7+VAT+++:::0+E'** The article is tax exempt
	SG39	

No. = Segment-Number in Guide

© 2019, IWOfurn Service GmbH

Example

No.	Name	Example

76	**ALC**	`ALC+A+++1+DI::9'`
		This item is discounted.
		
		`ALC+A+++1+DI::9'`
		`MOA+8:10.35:EUR'`
		A position discount in the amount of 10.35 EUR is granted.
		
		`ALC+C+++1+FC::9:Frachtkosten'`
		`MOA+8:20:EUR'`
		Freight charges of 20.00 EUR will be applied to this item.

	SG41	
77	**PCD**	`PCD+3:5'` The surcharge or discount is 5%.
	SG42	
78	**MOA**	`MOA+8:20:EUR'` The surcharge or discount amount is 20.00 EUR
	SG44	
79	**TAX**	`TAX+7+VAT+++:::19+S'` The discount refers to the part of the invoice subject to 19% VAT
2. Variant type of an article item		
	SG26	

80	**LIN**	`LIN+11++203:SA+1:10'`
		Here follows the information on the variant type "Korpusfarbe innen" (IDM code 203) of article position 10
		
		`LIN+35++155:SA+1:34'`
		`IMD+C++OP'`
		`LIN+36++K173:SA+1:35'`
		`IMD+C++OPV'`
		`IMD+F++:::Edelstahlfarben'`
		The "Farbe der GlastÃ¼rrahmen" (IDM code 155) for item 34 is "Edelstahl" (manufacturer code "K173").

81	**PIA**	`PIA+1+4388726364127:SRV'` The GTIN of the variant type is 4388726364127
82	**IMD**	`IMD+C++OP'` The item is flagged as a variant type.
83	**IMD**	`IMD+A++:::Korpusausführung'` The name of the variant type is "KorpusausfÃ¼hrung".
3. Variant of an article position		
	SG26	
84	**LIN**	`LIN+12++DM-WS:SA+1:11'` The variant (item 12) is a sub-item of the variant type "KorpusausfÃ¼hrung" (item 11) and has the ID "DM-WS".
85	**PIA**	`PIA+1+43556277645385:SRV'` The GTIN of the variant is 43556277645385
86	**IMD**	`IMD+C++OPV'` The item position is flagged as variant
87	**IMD**	`IMD+F++:::Damast weiß'` The variant designation of the carcase version is "Damask white".
4. Subitem of a set, display or container content		

No. = Segment-Number in Guide

© 2019, IWOfurn Service GmbH

Example

No.	Name	Example
	SG26	

88	**LIN**	`LIN+21++4312345678910:SRV+1:20'`
		Item 21 with GTIN 4312345678910 is a subitem of item 20
		
		`LIN+10++7630-SET:SA'`
		`IMD+A++:::Sitzgarnitur Dream'`
		`QTY+21:1:EA'`
		`MOA+203:999:EUR'`
		`PRI+AAA+999:::1:PCE'`
		`LIN+20++7630-003:SA+1:10'`
		`IMD+A++:::3-Sitzer Dream'`
		`QTY+21:1:PCE'`
		`LIN+30++7630-001:SA+1:10'`
		`IMD+A++:::1-Sitzer Dream'`
		`QTY+21:2:PCE'`
		A set of seats (ArtNr.: 7630-SET) for the price of 999,00 EUR consisting of one 3-seater and two 1-seater.
		
		`LIN+10++7630-SET-C:SA'`
		`IMD+A++:::Sitzgarnitur Custom Dream'`
		`QTY+21:1:EA'`
		`MOA+203:999:EUR'`
		`PRI+AAA+999:::1:PCE'`
		`LIN+20++7630-003:SA+1:10'`
		`IMD+A++:::3-Sitzer Dream'`
		`IMD+C++BA'`
		`QTY+21:1:PCE'`
		`LIN+21+++1:20'`
		`IMD+A++:::Ausfuehrung Fuss'`
		`IMD+C++OP'`
		`LIN+22+++1:21'`
		`IMD+A++:::Helsinki'`
		`IMD+C++OPV'`
		`LIN+30++7630-001:SA+1:10'`
		`IMD+A++:::1-Sitzer Dream'`
		`QTY+21:2:PCE'`
		A seating set (ArtNo.: 7630-SET-C) for the price of 999,00 EUR consisting of one configurable 3-seater (design foot: Helsinki) and two 1-seater (not configurable)

89	**IMD**	`IMD+C++CU'` The item is a consumer unit.
Message footer summary part		
	SG27	
90	**MOA**	`MOA+77:822.88:EUR'` The final invoice amount is 822,88 EUR
	SG27	

91	**MOA**	`MOA+79:691.50:EUR'`
		The total position amount is 691.50 EUR
		
		`MOA+124:131.38:EUR'`
		The VAT portion of the invoice is 131.85 EUR
		
		`MOA+125:691.50:EUR'`
		The taxable amount is 691.50 EUR

Message footer summary part per tax rate		

No. = Segment-Number in Guide

© 2019, IWOfurn Service GmbH

Example

No.	Name	Example
	SG34	

92	**TAX**	`TAX+7+VAT+++:::19+S'`
		The tax rate is 19%. This is a standard tax rate.
		
		`TAX+7+VAT+++:::7+S'`
		`MOA+124:48.40:EUR'`
		`MOA+125:697.14:EUR'`
		EUR 48.40 sales tax is due on the portion of the invoice with 7% tax (EUR 697.14).

93	**MOA**	`MOA+124:131.38:EUR'`
94	**MOA**	`MOA+125:691.50:EUR'` The taxable amount with 19% VAT. Share amounts to 691.50 EUR
95	**MOA**	`MOA+79:691.50:EUR'` The total item amount of all items with 19% VAT is 691.50 EUR
96	**MOA**	`MOA+131:9:EUR'` The total sum of all surcharges of the items with 19% VAT share is 9,00 EUR
97	**UNT**	`UNT+94+1'` The document consists of 94 segments
98	**UNZ**	`UNZ+1+1'` The message contains 1 document.

No. = Segment-Number in Guide

© 2019, IWOfurn Service GmbH